80CMxx016.87-01 - LinMot hybrid cable

1 Order data



Model number	Short description
	LinMot hybrid cable
80CM01016.87-01	ACOPOSmicro LinMot hybrid cable, length 1 m, 4x 1 mm² + 4x 0.14 mm², 9-pin male DSUB connector on the servo side, 9-pin female Intercontec M23 connector on the motor side, can be used in cable drag chains, UL/CSA listed
80CM02016.87-01	ACOPOSmicro LinMot hybrid cable, length 2 m, 4x 1 mm² + 4x 0.14 mm², 9-pin male DSUB connector on the servo side, 9-pin female Intercontec M23 connector on the motor side, can be used in cable drag chains, UL/CSA listed
80CM03016.87-01	ACOPOSmicro LinMot hybrid cable, length 3 m, 4x 1 mm² + 4x 0.14 mm², 9-pin male DSUB connector on the servo side, 9-pin female Intercontec M23 connector on the motor side, can be used in cable drag chains, UL/CSA listed
80CM05016.87-01	ACOPOSmicro LinMot hybrid cable, length 5 m, 4x 1 mm² + 4x 0.14 mm², 9-pin male DSUB connector on the servo side, 9-pin female Intercontec M23 connector on the motor side, can be used in cable drag chains, UL/CSA listed
80CM10016.87-01	ACOPOSmicro LinMot hybrid cable, length 10 m, 4x 1 mm² + 4x 0.14 mm², 9-pin male DSUB connector on the servo side, 9-pin female Intercontec M23 connector on the motor side, can be used in cable drag chains, UL/CSA listed
80CM15016.87-01	ACOPOSmicro LinMot hybrid cable, length 15 m, 4x 1 mm² + 4x 0.14 mm², 9-pin male DSUB connector on the servo side, 9-pin female Intercontec M23 connector on the motor side, can be used in cable drag chains, UL/CSA listed
80CM20016.87-01	ACOPOSmicro LinMot hybrid cable, length 20 m, 4x 1 mm² + 4x 0.14 mm², 9-pin male DSUB connector on the servo side, 9-pin female Intercontec M23 connector on the motor side, can be used in cable drag chains, UL/CSA listed

Table 1: 80CM01016.87-01, 80CM02016.87-01, 80CM03016.87-01, 80CM05016.87-01, 80CM10016.87-01, 80CM15016.87-01, 80CM20016.87-01 - Order data

2 Technical data

Model number	80CM01016.87-01	80CM02016.87-01	80CM03016.87-01	80CM05016.87-01	80CM10016.87-01	80CM15016.87-01	80CM20016.87-01
General information							
Cable cross section	4x 0.14 mm² + 4x 1 mm²						
Cable construction							
Power lines							
Quantity	8						
Wire insulation	TPE						
Wire colors	0.14 mm²: White, black, green, yellow; 1 mm²: Red, pink, blue, gray						
Design	0.14 mm² tinned copper braid						
Cross section	0.14 mm² and 1 mm²						
Shield	Tinned copper braid						
Stranding	Wires braided in layers						
Cable stranding	Via inner element (4x 0.14 mm²) C wires 1 mm² optimally braided in layers						
Complete shielding	Tinned copper braid						
Outer jacket							
Material	PUR						
Color	Jet black						
Labeling	Linear motor cable KS010						
Electrical characteristics							
Test voltage							
Wire/Wire	2000 V						
Wire/Shield	1200 V						
Mechanical characteristics							
Dimensions							
Length	1 m	2 m	3 m	5 m	10 m	15 m	20 m
Diameter	10.8 mm						
Bend radius							
Single bend	5x wire diameter						
Moving	10x wire diameter						
Can be used in cable drag chains	Yes						

Table 2: 80CM01016.87-01, 80CM02016.87-01, 80CM03016.87-01, 80CM05016.87-01, 80CM10016.87-01, 80CM15016.87-01, 80CM20016.87-01 - Technical data

3 Wiring

3.1 Pinout

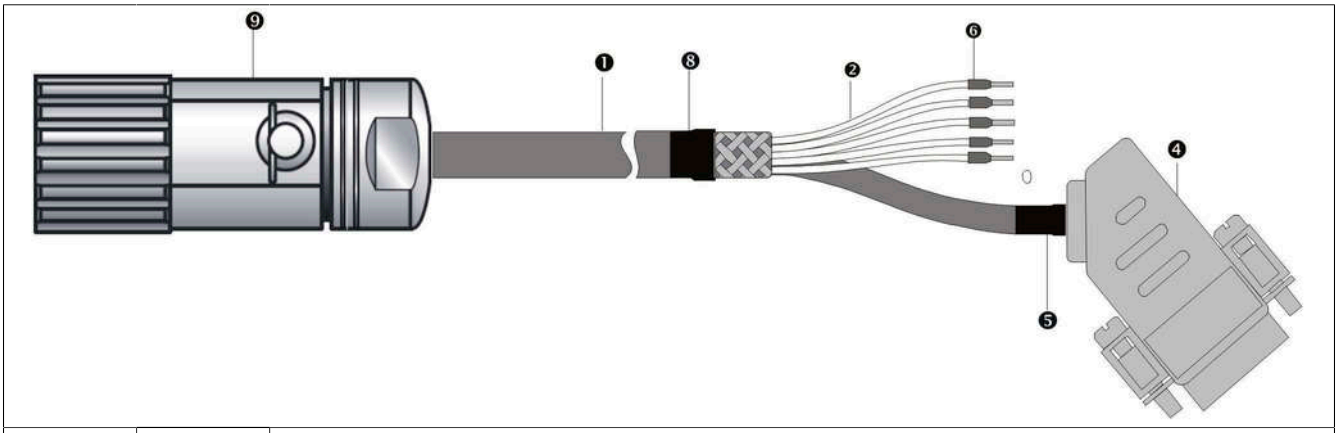

Position	Quantity	Description
1	1	Motor line (Cable diameter: 10.8 mm) (4x 1 mm²) (4x 0.14 mm²)
2	1	Cable shield covered with heat shrink tubing: Color: Yellow/Green
4	1	DSUB
5	1	Heat shrink tubing
6	5	Wire end sleeve
8	1	Heat shrink tubing
9	1	9-pin connection

Table 3: Components

Connection	Pin	Description	Color	Function	Pin	Connection
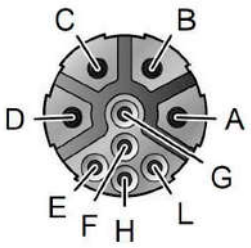	A	Phase1+	Red	Motor connection Ph1+		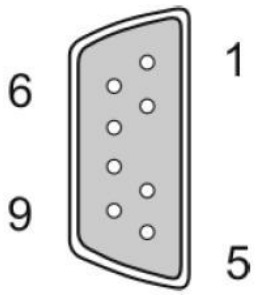
	B	Phase1-	Pink	Motor connection Ph1-		
	C	Phase2+	Blue	Motor connection Ph2+		
	D	Phase2-	Gray	Motor connection Ph2-		
	E	+5 VDC	White	Encoder power supply 5 V	1	
	F	AGND	Inner shield	Encoder power supply 0 V	6	
	G	Sin+	Yellow	Sine input+	2	
	H	Cos+	Green	Cosine input-	5	
	L	Temperature	Black	TEMP	8	
		Jacket	-	External shield		

Table 4: Pinout

3.2 Cable diagram

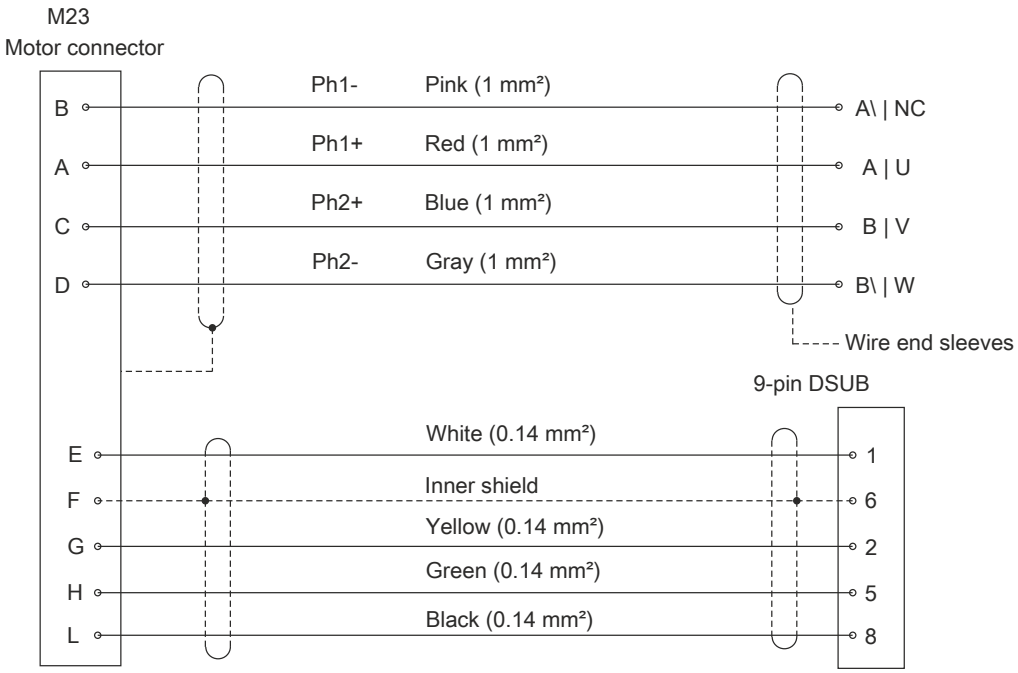

Table 5: Cable diagram