Features/Benefits:



Patented four-corner "click & fit" system – Enhancing our traditional "click & fit" system, we created an easier to assemble and tighter seal against multiple gauge enclosure sizes.

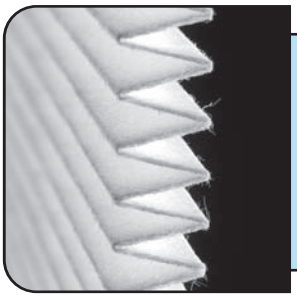

Special Fluted Filter – This special Type 12 filter increases time between maintenance by three times and allows for greater CFM in dirty environments.



True hardware-free mounting – Our Filterfans do not require any screws to create the pressure on our gasket material to maintain a Type 12 seal against the enclosure. Removing these screws reduce the labor time to mount the Filterfans by greater than 200%.

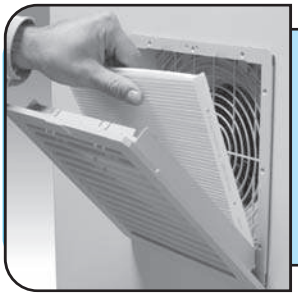

Easy to change filter – The patented hinge system allows for a quick, hands-free change. This reduces the number of lost and damaged grills when they items are placed on floors and carried away from the machine.

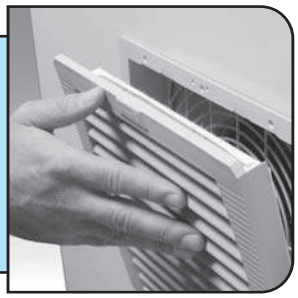

UL tested NEMA Type 12 rating - Our Filterfans are tested by UL to UL 50 Type 12 and NITW2 categories allowing Integrators to maintain the enclosure ratings of the enclosure while maintaining the high CFM ratings of our original Filterfans.

www.filterfanusa.com

Options:

- **Low EMC Option –** If low EMI emissions are a concern for your application, please contact Pfannenberg for our EMC version of these Filterfans.
- **IP 55, Outdoor/Washdown Option –** By using a UV resistant grill, Pfannenbergís new Filterfans meet the European IP55 rating for enclosures.
- **Rainhood Option –** If more security is needed in outdoor or washdown environments then consider our PF-RH-XXXX series.
- **Special Colors/Voltages –** Many of our Filterfans are available is special colors and voltages. Please consult with the factory.

Table of Contents

NEW FilterFan		
Introduction		27
New PF	PF 11000/22000, PFA 1/20000	44-45
	PF 32000, PFA 30000	46-47
	PF 42500/43000, PFA 40000	48-49
	PF 65/66/67000, PFA 60000	50-51
New PTF	PTF 60500/60700/61000	52-53
3rd Gen PF	PF Series - 3rd Generation	54-55
	PFA Series - 3rd Generation	56
	PF-RH Rainhoods	57
	Panel Fans	58

Filterfan PF 11000-22000 / Exhaust Filter PFA 10000-20000

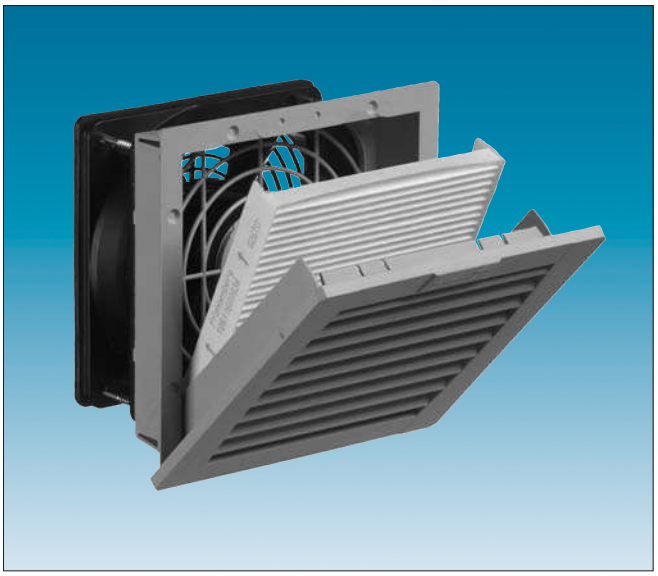

- Maintains a UL Tested NEMA Type 12 seal against enclosure
- UL Recognized to UL 508a, category NITW2/8, UL File #E175229, CE approved for European use
- Patented “Click & Fit” design provides a hardware free installation!
- Plastic made from strong, heat resistant (ABS-FR), UL 94 VO fire approved material

Options: EMC, IP55, Light Grey or Black Grills



NEMA Type



Approvals


Mounting

Airflow data	PF 11000	PF 22000	PFA 10000 PFA20000
Filter material	Type 12 filter mat	Type 12 filter mat	Type 12 filter mat
Unimpeded airflow	17 CFM	38 CFM	-
Capacity free-flow	10 W/K	21 W/K	-
Airflow in combination (Filterfan + Exhaust Filter)	11 CFM (PF 22000 + PFA 20000)	28 CFM (PF 22000 + PFA 20000)	-
Capacity in combination (Filterfan + Exhaust Filter)	6 W/K (PF 22000 + PFA 20000)	15 W/K (PF 22000 + PFA 20000)	-
Max. static pressure (Airflow = 0 m³/h)	38 Pa	57 Pa	-
Filtration efficiency	88%	91%	88/91%
Filter material grade	G 3 (DIN EN 779)	G 4 (DIN EN 779)	G3/ G4 (DIN EN 779)
Duty cycle	100%	100%	

Technical data	PF 11000		PF 22000		PFA 10000/ PFA 20000
	AC	DC	AC	DC	
Outside dimensions in mm (height x width x installation depth)	109 x 109 x 62	109 x 109 x 49	145 x 145 x 70	145 x 145 x 64	109 x 109 x 26/ 145 x 145 x 26
Bearing type	sleeve bearings	ball bearings	sleeve bearings	ball bearings	-
Fitting position	vertical	any	vertical	any	-
Construction	housing and guard of sprayed thermoplastic, self-extinguishing, UL 94 VO				
Weight	0.55 kg	0.16 kg	0.7 kg	0.44 kg	0.06 kg / 0.12 kg
Safety protection	in accordance with DIN 31 001			-	
Color	RAL 7035, RAL 7032 or black, other colors on request				
Connection	terminal strip		2 wires, 310 mm long		-
System of protection	NEMA Type 12, IP 55 (EN 60 529), when installed as specified				

Electrical data	PF 11000			PF 22000		
	AC	AC	DC	AC	AC	DC
Rated voltage	230 V	115 V	24 V	230 V	115 V	24 V
Power consumption	11 W	11 W	2 W	18 W	20 W	5 W

Airflow data:

PF 11000

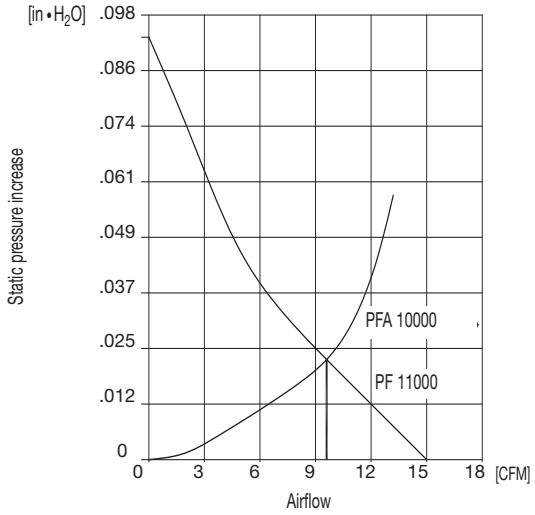

PF 22000

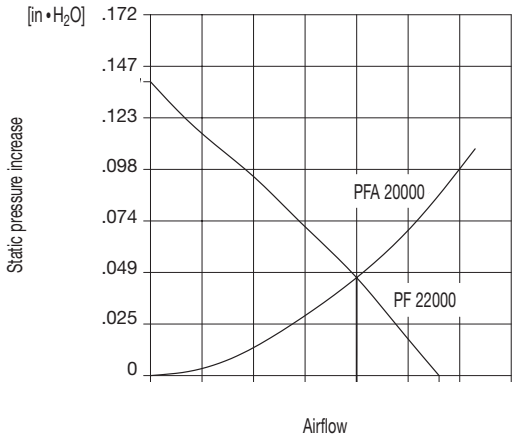

Mechanical data:

PF 11000

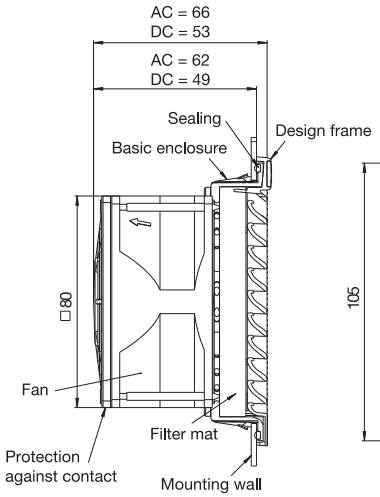

PF 11000 + PFA 10000

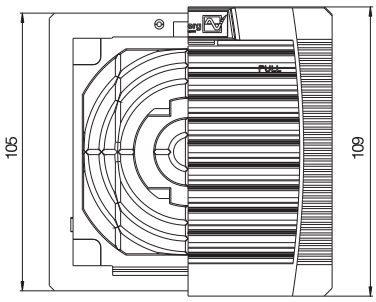

PFA 10000

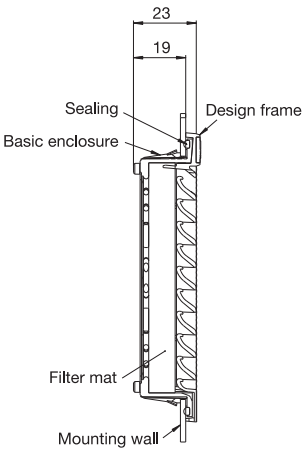

Cutout

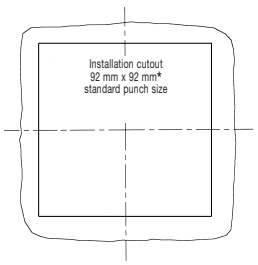

Mechanical data:

PF 22000

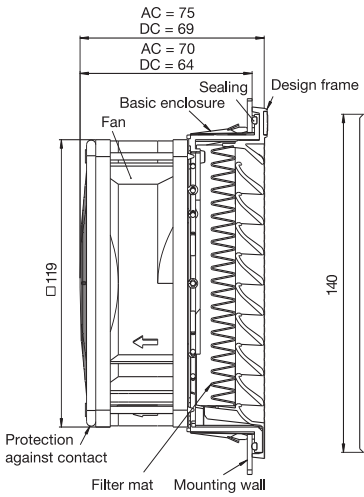

PF 22000 + PFA 20000

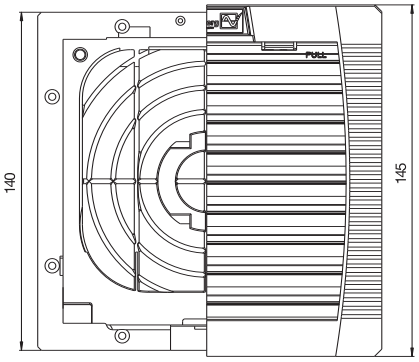

PFA 20000

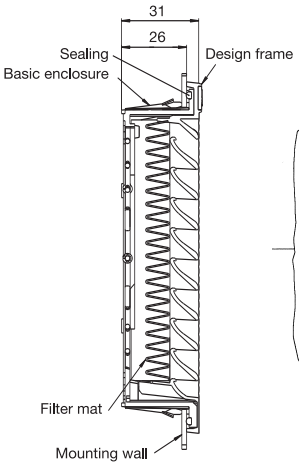

Cutout

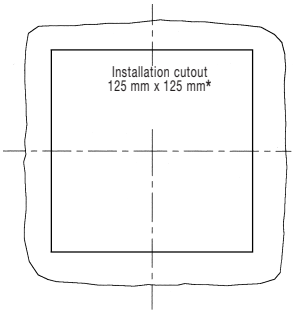

Filterfan PF 32000 / Exhaust Filter PFA 30000

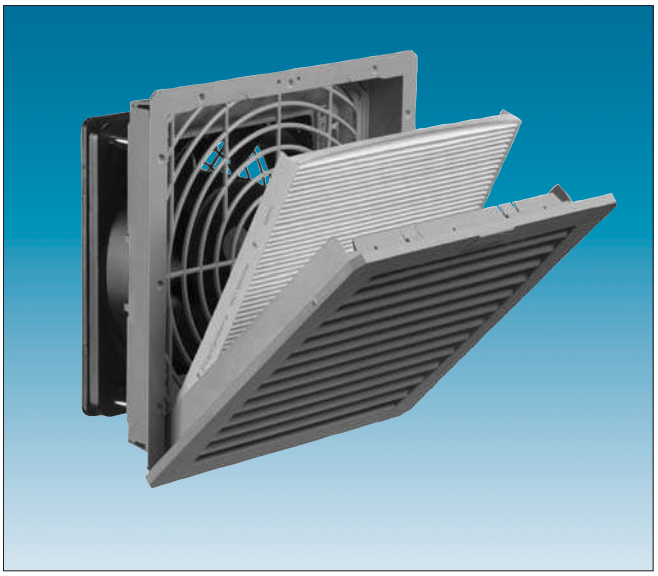

- Maintains a UL Tested NEMA Type 12 seal against enclosure
- UL Recognized to UL 508a, category NITW2/8, UL File #E175229, CE approved for European use
- Patented “Click & Fit” design provides a hardware free installation!
- Plastic made from strong, heat resistant (ABS-FR), UL 94 VO fire approved material

Options: EMC, IP55, Light Grey or Black Grills



NEMA Type



Approvals


Mounting

Airflow data	PF 32000	PFA 30000
Filter material	NEMA Type 12 filter mat	
Unimpeded airflow	65 CFM	-
Capacity free-flow	37 W/K	-
Airflow in combination (Filterfan + Exhaust Filter)	38 CFM (PF 32000 + PFA 30000)	-
Capacity in combination (Filterfan + Exhaust Filter)	21 W/K (PF 32000 + PFA 30000)	-
Max. static pressure (Airflow = 0 m³/h)	61 Pa	-
Filtration efficiency	91%	
Filter material grade	G 4 (DIN EN 779)	
Duty cycle	100%	-

Technical data	PF 32000		PFA 30000
	AC	DC	
Outside dimensions in mm (height x width x installation depth)	202 x 202 x 87	202 x 202 x 81	202 x 202 x 34
Bearing type	sleeve bearings	ball bearings	-
Fitting position	vertical	any	any
Construction	housing and guard of sprayed thermoplastic, self-extinguishing, UL 94 VO		
Weight	0.87 kg	0.61 kg	0.26 kg
Safety protection	in accordance with DIN 31 001		-
Color	RAL 7035, RAL 7032 or black		
Connections	terminal strip	cage clamp	-

Electrical data	PF 32000				
	AC 50 Hz / 60 Hz		DC		
Rated voltage +/- 10%	230 V	115 V	12 V	24 V	48 V
Power consumption	19 W / 18 W	20 W / 20 W	5 W	5 W	5 W

Airflow data:

PF 32000

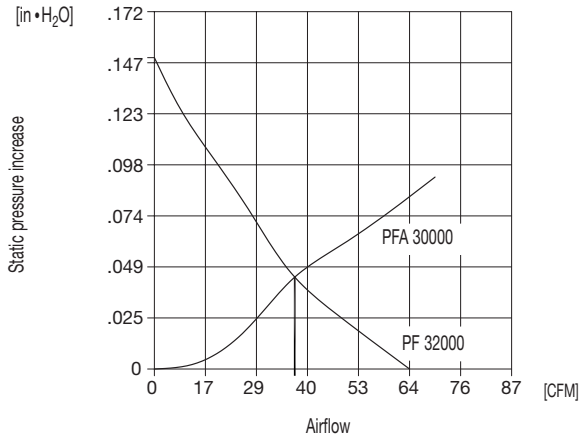

cutout:

PF 32000 + PFA 30000

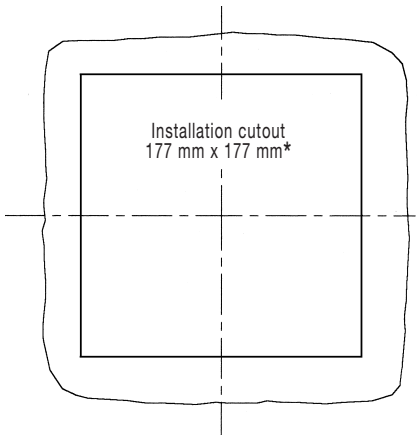

Mechanical data:

PF 32000

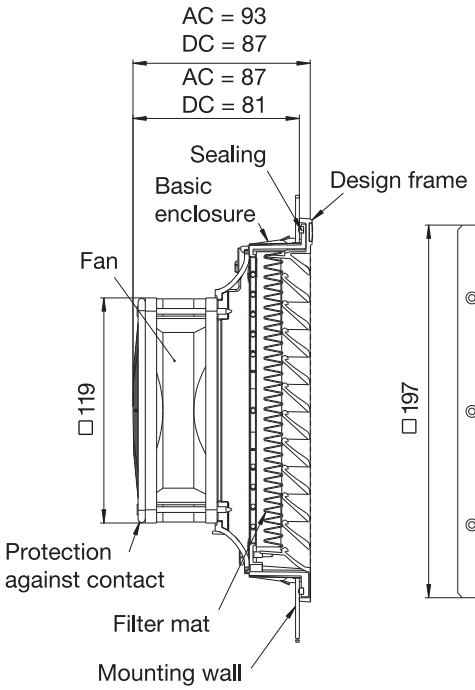

PF 32000 + PFA 30000

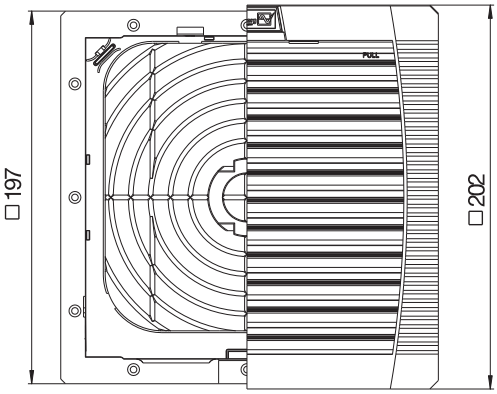

PFA 30000

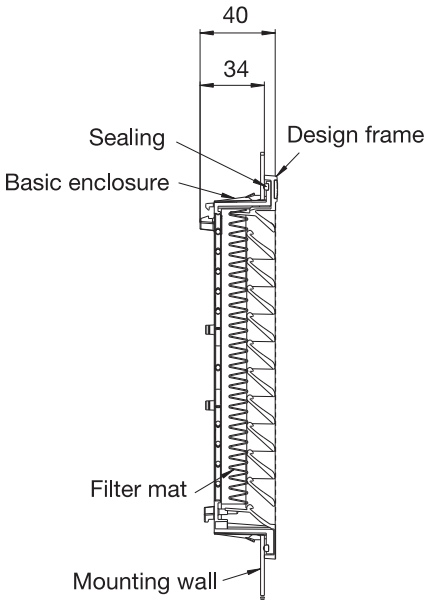

Supplementary data	PF 32000 AC	PF 32000 DC	PFA 30000
Operating temperature	– 15 °C (- 5 °F) to / bis + 55 °C (+ 131 °F)		
Storage temperature	– 20 °C (- 4 °F) to / bis + 70 °C (+ 158 °F)		
Max. relative humidity	90%		
System of protection	NEMA Type 12, IP 55 (EN 60 529), when installed as specified		
Basic Accessories	parts kit filter mat, user manual radiant heater, fan heater, thermostat, hygrostat		
Approvals	UL Recognized		
* Tolerance installation cutout	177 + 1/-0 thickness of material to 2 mm 178 + 1/-0 thickness of material > 2 mm < 3 mm		

Filterfan PF 42500, PF 43000 / Exhaust Filter PFA 40000

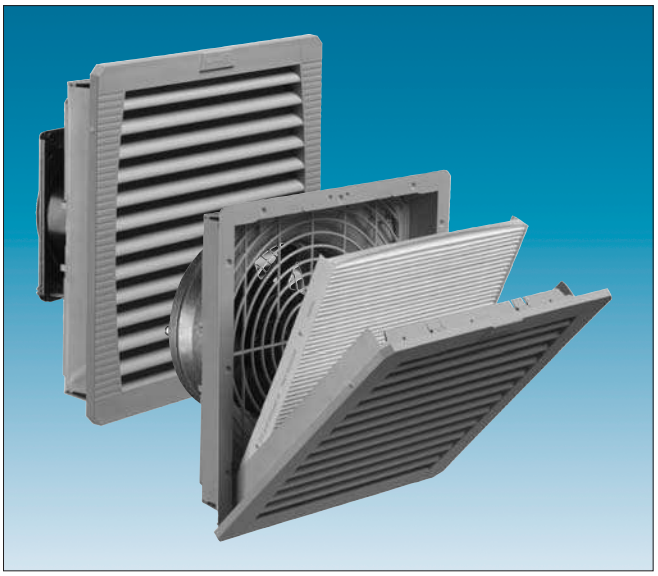

- Maintains a UL Tested NEMA Type 12 seal against enclosure
- UL Recognized to UL 508a, category NITW2/8, UL File #E175229, CE approved for European use
- Patented “Click & Fit” design provides a hardware free installation!
- Plastic made from strong, heat resistant (ABS-FR), UL 94 VO fire approved material

Options: EMC, IP55, Light Grey or Black Grills



NEMA Type



Approvals


Mounting

Airflow data	PF 42500	PF 43000	PFA 40000
Filter material	NEMA Type 12 Filtermat		
Unimpeded airflow	94 CFM	169 CFM	-
Capacity free-flow	53 W/K	188 W/K	-
Airflow in combination (Filterfan + Exhaust Filter)	67 CFM (PF 42500 + PFA 40000)	142 CFM (PF 43000 + PFA 40000)	-
Capacity in combination (Filterfan + Exhaust Filter)	38 W/K (PF 43000 + PFA 40000)	69 W/K (PF 43000 + PFA 40000)	-
Max. static pressure (Airflow = 0 m³/h)	49 Pa	112 Pa	-
Filtration efficiency	91%		
Filter material grade	G 4 (DIN EN 779)		
Duty cycle	100%		-

Technical data	PF 42500		PF 43000		PFA 40000
	AC	DC	AC	DC	
Outside dimensions in mm (height x width x installation depth)	252 x 252 x 97		252 x 252 x 113	252 x 252 x 97	252 x 252 x 38
Bearing type / Lagerart	ball bearings				-
Fitting position / Einbaulage	any, horizontal airflow preferred				any
Construction	housing and guard of sprayed thermoplastic, self-extinguishing, UL 94 VO				
Weight	1.18 kg	0.92 kg	1.67 kg	1.51 kg	0.46 kg
Safety protection	in accordance with / gemäß DIN 31 001				-
Color	RAL 7035, RAL 7032 or black				
Connections / Anschlussart	cage clamp				-

Electrical data	PF 42500					
	AC 50 Hz / 60 Hz				DC	
Rated voltage +/- 10%	230 V		115 V		24 V	
Power consumption	19 W / 18 W		20 W / 20 W		4,7 W	
	PF 43000					
	AC 50 Hz / 60 Hz				DC	
Rated voltage +/- 10%		230 V	115 V		24 V	
Power consumption		45 W / 39 W	40 W / 40 W		12 W	

Airflow data:

PF 42500 / PF 43000

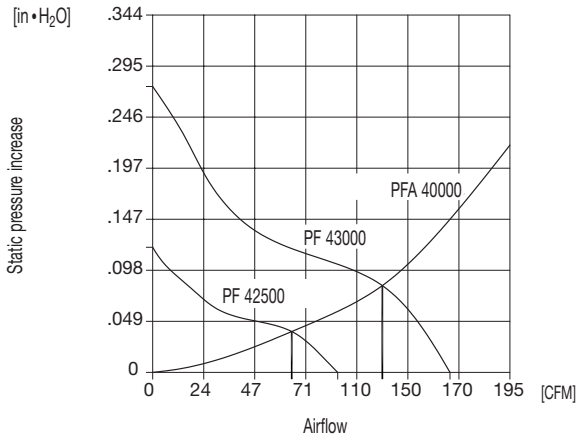

cutout:

PF 42500, PF 43000 + PFA 40000

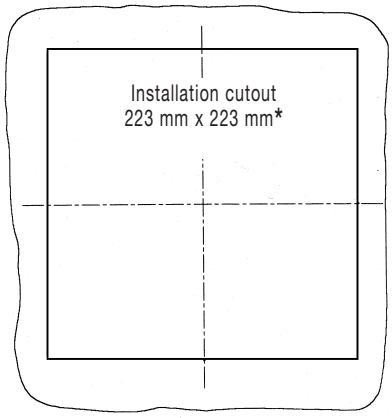

Mechanical data:

PF 42500, PF 43000

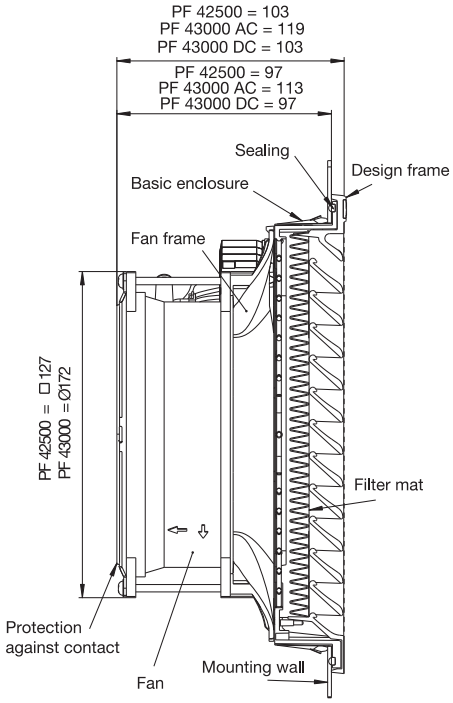

PF 42500 PF 43000, PFA 40000

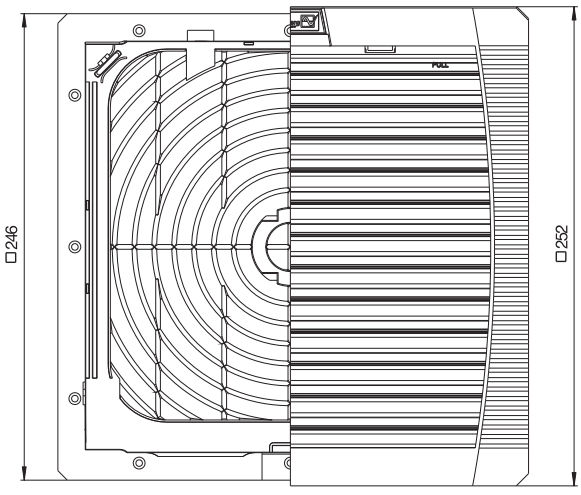

PFA 40000

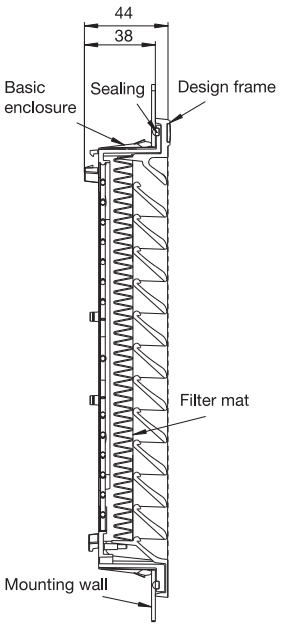

Supplementary data	PF 42500	PF 43000	PFA 40000
Operating temperature	– 15 °C (- 5 °F) to / bis + 55 °C (+ 131 °F)		
Storage temperature	– 20 °C (- 4 °F) to / bis + 70 °C (+ 158 °F)		
Max. relative humidity	90%		
System of protection	NEMA Type 12, IP 55 (EN 60 529), when installed as specified		
Basic Accessories	parts kit filter mat, user manual radiant heater, fan heater, thermostat, hygrostat		
Approvals	UL Recognized		
* Tolerance installation cutout	177 + 1/-0 thickness of material to 2 mm 178 + 1/-0 thickness of material > 2 mm < 3 mm		

Filterfan PF 65000, PF 66000, PF 67000 / Exhaust Filter PFA 60000



- Maintains a UL Tested NEMA Type 12 seal against enclosure
- UL Recognized to UL 508a, category NITW2/8, UL File #E175229, CE approved for European use
- Patented “Click & Fit” design provides a hardware free installation!
- Plastic made from strong, heat resistant (ABS-FR), UL 94 VO fire approved material

Options: EMC, IP55, Light Grey or Black Grills



NEMA Type


Approvals


Mounting

Airflow data	PF 65000	PF 66000	PF 67000	PFA 60000
Filter material	NEMA Type 12 Filtermat			
Unimpeded airflow	297 CFM	462 CFM	560 CFM	
Capacity free-flow	IP 54: 160 W/K / 160 W/K IP 55: 168 W/K / 168 W/K	IP 54: 213 W/K / 218 W/K IP 55: 257 W/K / 262 W/K	IP 54: 282 W/K / 292 W/K IP 55: 308 W/K / 317 W/K	-
Airflow in combination (Filterfan + Exhaust Filter)	230 CFM (PF 65000 + PFA 60000)	295 CFM (PF 66000 + PFA 60000)	368 CFM (PF 67000 + PFA 60000)	-
Capacity in combination (Filterfan + Exhaust Filter)	I127 W/K (PF 65000 + PFA 60000)	I167 W/K (PF 66000 + PFA 60000)	208 W/K (PF 67000 + PFA 60000)	-
Max. static pressure (Airflow = 0 m3/h)	74 Pa	134 Pa	187 Pa	-
Filtration efficiency	91 %			91 %
Filter material grade	G 4 (DIN EN 779)			G 4 (DIN EN 779)
Duty cycle	100%			-

Technical data	PF 65000	PF 66000	PF 67000	PFA 60000
Outside dimensions in mm (height x width x installation depth)	320 x 320 x 150	320 x 320 x 150	320 x 320 x 150	320 x 320 x 39
Bearing type	ball bearings			-
Fitting position	any, horizontal airflow preferred			any
Construction	housing and guard of sprayed thermoplastic, self-extinguishing, UL 94 VO			
Weight	3.2 kg	3.2 kg	3.7 kg	0.7 kg
Safety protection	in accordance with DIN 31 001			-
Color	RAL 7035, RAL 7032 and black			
Connections	cage clamp			-

Electrical data	PF 65000		PF 66000			PF 67000		
Rated voltage +/- 10%	230 V	115 V	460 V 3~	230 V	115 V	460 V 3~	230 V	115 V
Power consumption	150 W	90 W	n/a	150 W	160 W	n/a	1232 W	195 W

Airflow data:

PF 65000 / PF 66000 / PF 67000

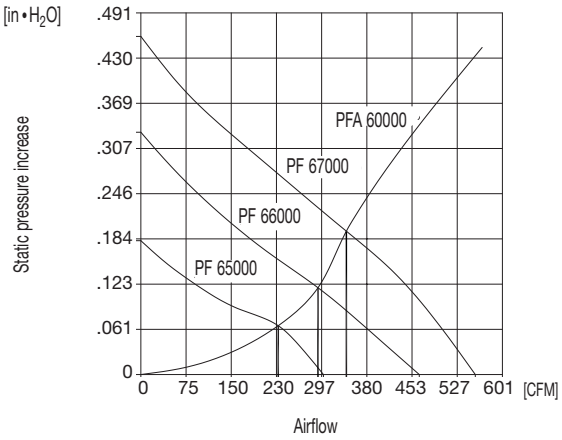

Cutout:

PF 65000, PF 66000, PF 67000 + PFA 60000

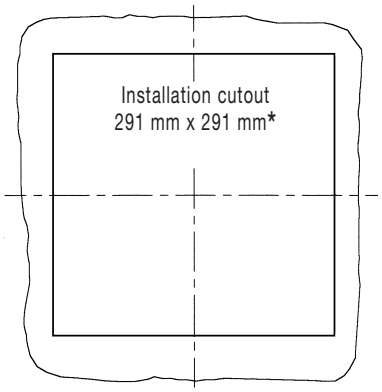

Mechanical data:

PF 65000, PF 66000, PF 67000

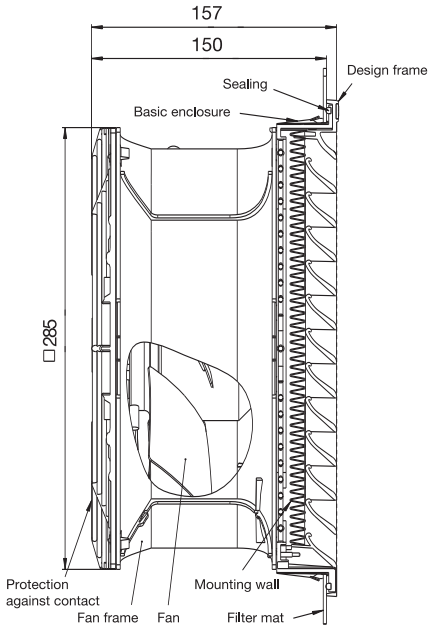

PF 65000, PF 66000, PF 67000 + PFA 60000

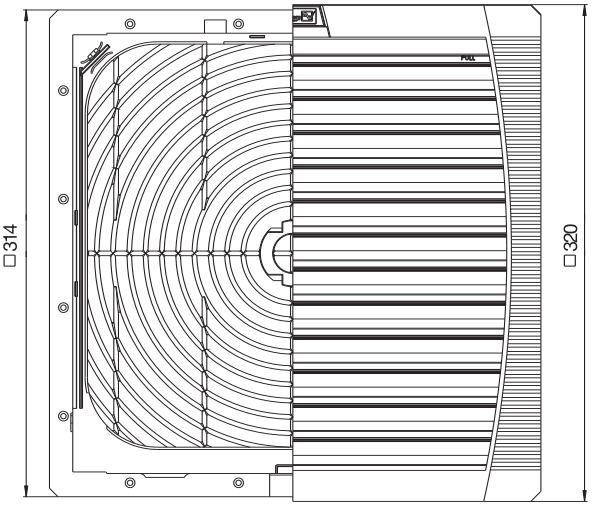

PFA 60000

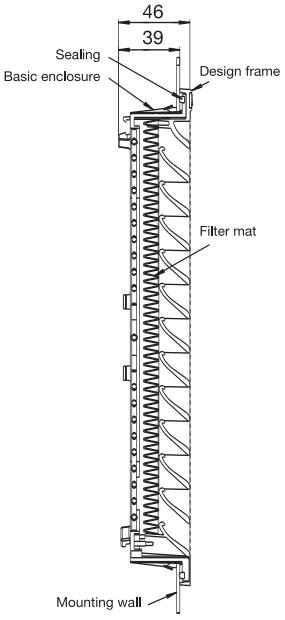

Supplementary data	PF 65000	PF 66000	PF 67000
Operating temperature	– 15 °C (- 5 °F) to / bis + 55 °C (+ 131 °F)		
Storage temperature	– 20 °C (- 4 °F) to / bis + 70 °C (+ 158 °F)		
Max. relative humidity	90%		
System of protection	NEMA Type 12, IP 55 (EN 60 529), when installed as specified		
Basic Accessories	parts kit filter mat, user manual radiant heater, fan heater, thermostat, hygrostat		
Approvals	UL Recognized		
* Tolerance installation cutout	177 + 1/-0 thickness of material to 2 mm 178 + 1/-0 thickness of material > 2 mm < 3 mm		

Filterfan PTF 60500, PTF 60700, PTF 61000 / Exhaust Filter PTFA 60000

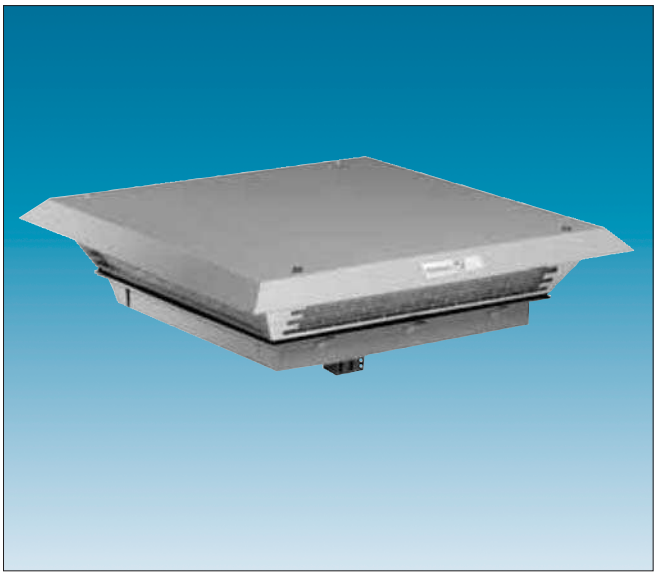

- Maintains a NEMA 12 seal against enclosure
- UL Recognized to UL 508a, category NITW2/8, UL File #E175229, CE approved for European use
- Patented “Click & Fit” design provides a hardware free installation!
- Metal Pagoda Cover for rugged environments, easily painted to match machine color

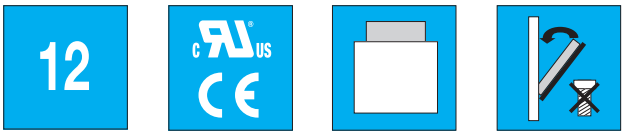

NEMA Rating | Approvals | Mounting | Mounting

Airflow data	PTF 60500	PTF 60700	PTF 61000	PTFA 60000
Filter material	NEMA 12 Filtermat			
Unimpeded airflow	226 CFM	356 CFM	485 CFM	
Capacity free-flow	113 W/K	177 W/K	242 W/K	-
Airflow in combination (Filterfan + Exhaust Filter)	149 CFM (PTF 60500 + PFA 60000)	227 CFM (PTF 60700 + PFA 60000)	304 CFM (PTF 61000 + PFA 60000)	-
Capacity in combination (Filterfan + Exhaust Filter)	74 W/K (PTF 60500 + PFA 60000)	113 W/K (PTF 60700 + PFA 60000)	152 W/K (PTF 61000 + PFA 60000)	-
Max. static pressure (Airflow = 0 m3/h)	71 Pa	88 Pa	158 Pa	-
Filtration efficiency		81 %		81 %
Filter material grade	G 3 (DIN EN 779)			G 3 (DIN EN 779)
Duty cycle	100%			-

Technical data	PTF 60500	PTF 60700	PTF 61000	PTFA 60000
Outside dimensions in mm (height x width x installation depth)	125 x 430 x 430 x 50	140 x 470 x 470 x 50	140 x 470 x 470 x 50	-
Bearing type	ball bearings			-
Fitting position	horizontal			any
Construction	metal chassis cover powder coaded, snapin plastic housing			
Weight	5.5 kg	5.8 kg	6.0 kg	3.1 kg
Safety protection	in accordance with DIN 31 001			-
Color	RAL 7035 (Light Grey)			
Connections	terminal strip			-

Electrical data	PTF 60500		PTF 60700			PTF 61000		
Rated voltage +/- 10%	230 V	115 V	460 V 3~	230 V	115 V	460 V 3~	230 V	115 V
Power consumption	24 W	24 W	n/a	80 W	90 W	n/a	150 W	170 W

Airflow data:

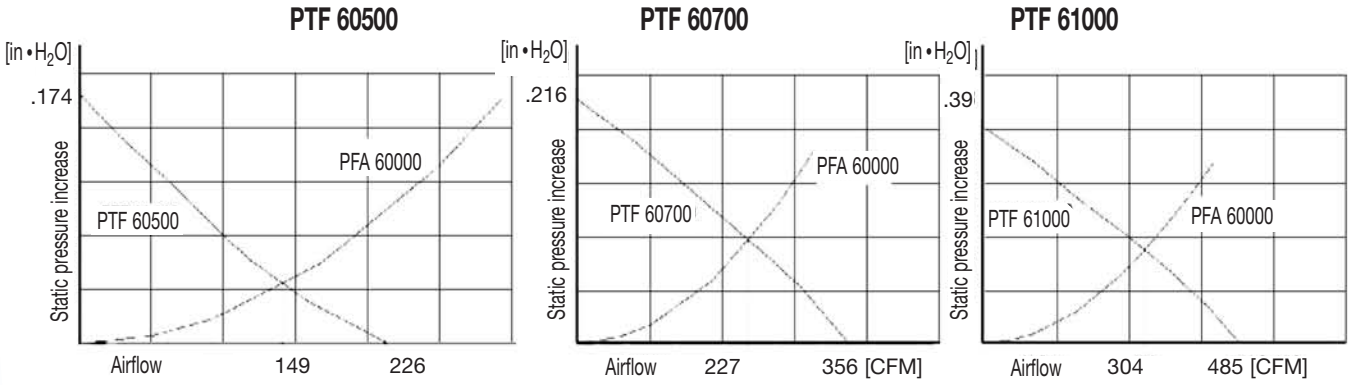

Mechanical data:

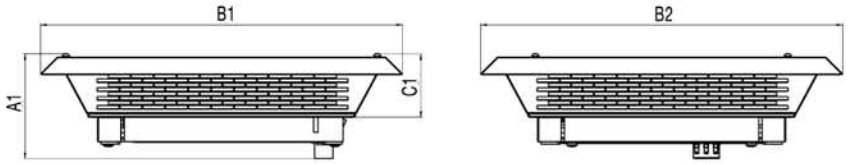

	PTF 60500	PTF 60700	PTF 61000	PTFA 60000
A1	125	140	140	110*
B1/B2	430	470	470	430
C1	75	90	90	75

* no terminal strip

Cutout

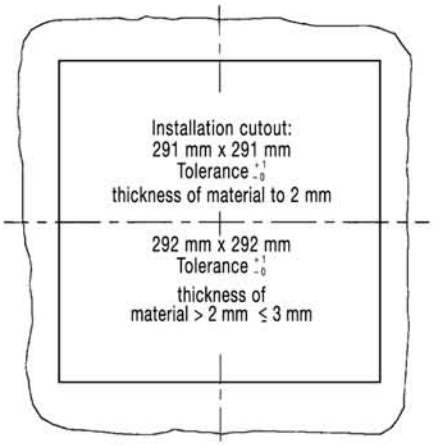

Airflow data:	PTFA 60000
Filter material	P 300
Filtration efficiency	81%
Filter material grade (DIN EN 779)	G 3

Technical data:	PTFA 60000
Outside dimensions in mm (Height x Width x Depth x Installation depth)	110 x 430 x 430 x 35
Construction	metal chassis, cover powder-coated; snap-in body of sprayed thermoplastic (ABS-FR) self-extinguishing, UL 94 VO
Weight	3.1 kg
Safety protection	in accordance with DIN 31 001
Colour	RAL 7035, RAL 7032, other colours on request

Supplementary data:	PTFA 60000
Operating temperature	– 10 °C (+ 14 °F) to + 55 °C (+ 131 °F)
Storage temperature	– 20 °C (- 4 °F) to + 70 °C (+ 158 °F)
Max. relative humidity	90%
System of protection	IP 33, IP 54 (EN 60 529), when installed as specified
Accessories	radiant heater, fan heater, thermostat, see Thermal Management
Tolerance installation cutout	291^{+1}_{0} thickness of material to 2 mm; 292^{+1}_{0} thickness of material > 2 mm ≤ 3 mm
Approvals	pending

3rd Generation Filterfans®

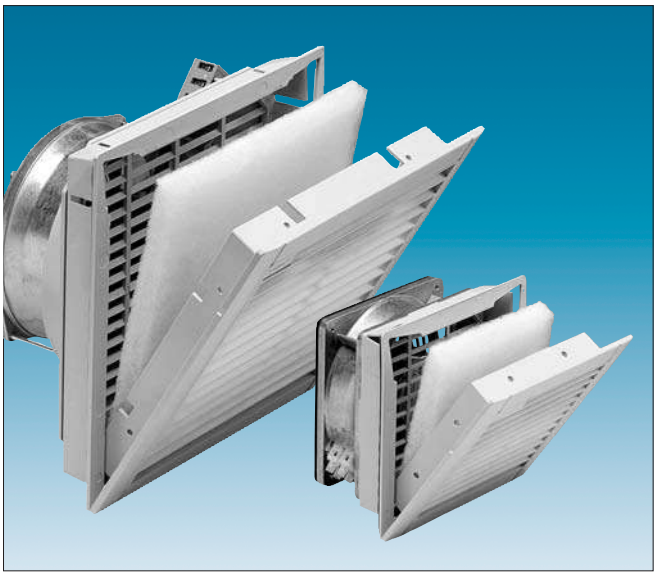

- Maintains a NEMA 12 seal against enclosure
- UL Recognized to UL 508a, category NITW2/8, UL File #E175229, CE approved for European use
- Patented “Click & Fit” design provides a hardware free installation!
- Plastic made from strong, heat resistant (ABS-FR), UL 94 VO fire approved material

Options: Light Grey, Beige or Black Grills



NEMA Rating


Approvals

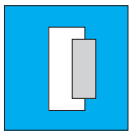
Mounting


Mounting

Air Flow data:	PF 1000	PF 2000	PF 2500	PF 3000	PF 5000	PF 6000	PF 7000
Free flow air delivery (CFM2)	16	38	89	169	324	410	506
Air delivery w/ exhaust (CFM3)	10	28	62	142	249	295	368
Max. static presure (PA)	29	69	57	89	205	225	174
Filter density (g/m2)	150						
Filtration efficiency	73						
Noise level	39	49	53	55	69	71	76
Ambient temperature °F (Max/Min)	140/14	122/14	122/14	122/14	122/14	122/14	122/14
Max. relative humidity (rH)	90%						
Duty cycle	100%						

Electrical data:	PF 1000	PF 2000	PF 2500	PF 3000	PF 5000	PF 6000	PF 7000
Rated voltage	115V / 230V / 24vdc				115V / 230V		
Rated frequency	50/60Hz (Fan CFM based on 115V 60Hz performance)						
Power consumption	12 Watts	19 Watts	18 Watts	43 Watts	63 Watts	122 Watts	167 Watts
Current draw (Amps)	0.15/0.08/0.1 A	0.25/0.13/0.24 A	0.25/0.13/0.24 A	0.5/0.25/0.5 A	0.7/0.35 A	1.7/0.8 A	1.5/0.7 A
Connection Method	Terminal strip						

Supplementary data:	PF 1000	PF 2000	PF 2500	PF 3000	PF 5000	PF 6000	PF 7000
Weight (without packaging)	1.21 lbs	1.62 lbs	3.8 lbs	4.0 lbs	6.6 lbs	7.7 lbs	9.0 lbs
Outside dimensions	105 x 105 x 52	150 x 150 x 72	250 x 250 x 111	250 x 250 x 121	325 x 325 x 157	325 x 325 x 158	325 x 325 x 125
Bearing type	sleeve bearings		ball bearings				
Construction material	sprayed thermoplastic (ABS-FR), self-extinguishing UL 94 VO						
Standard Colors	RAL 9011 (black) or RAL 7032 (beige)						
Climatic data	max. ambient temperature +131°F (+55°C) min. ambient temperature +46°F (+8°C)						
NEMA Rating / Ingress protection	NEMA 1/ IP 43	NEMA 12 / IP 54					

Consult Factory for More Special Style Filterfans Including:

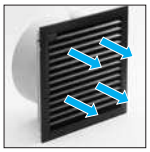
Reverse Flow - PF xxxx “A” Models


Low EMC Versions (PF 2000 - PF 6000)


IP 55 Versions (PF 2000 - PF 7000)

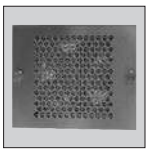
Traditional Metal Box Fans

Mechanical data:

PF 1000

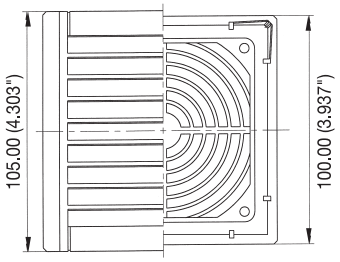

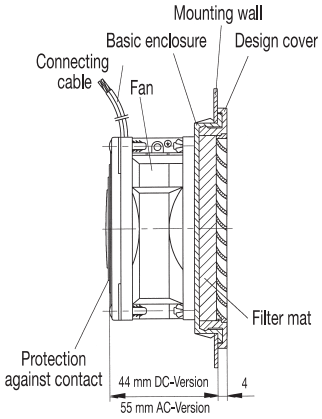

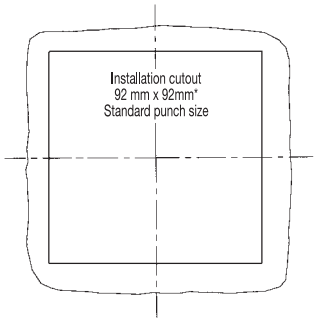

Installation cutout

PF 2000

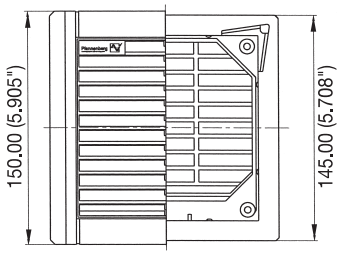

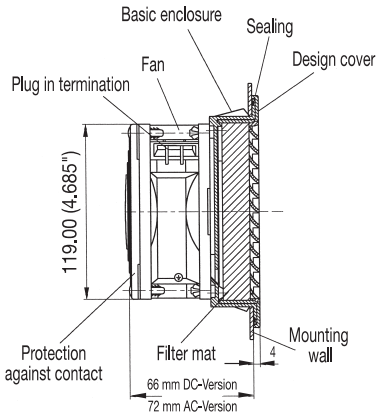

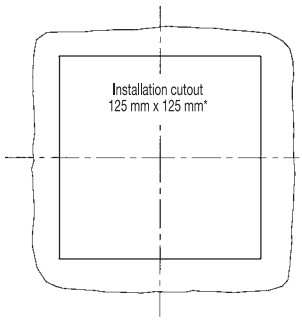

Installation cutout

PF 2500 & 3000

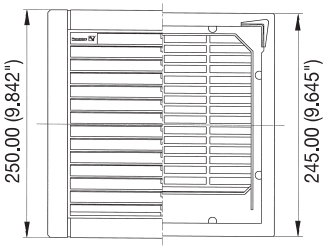

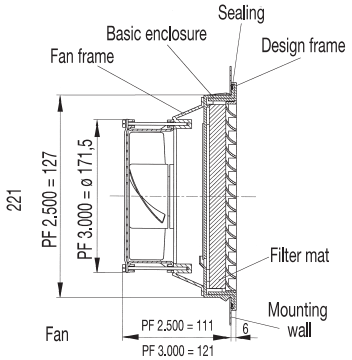

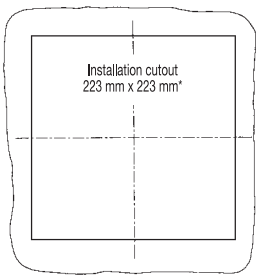

Installation cutout

PF 5000, 6000 & 7000

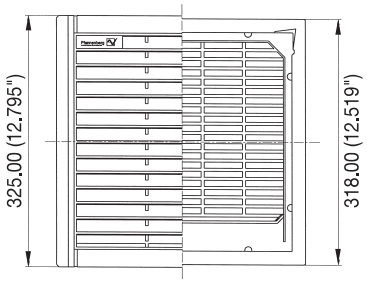

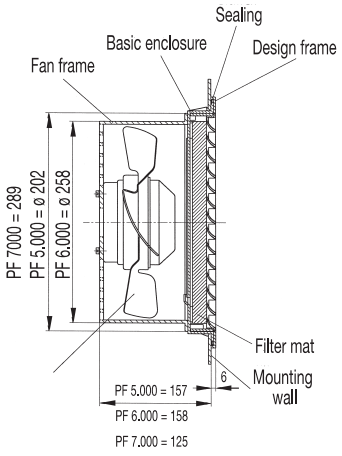

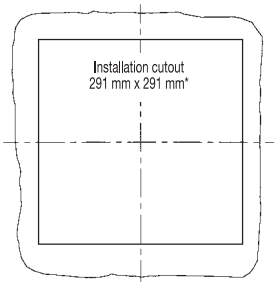

Installation cutout

3rd Generation Exhaust Filters

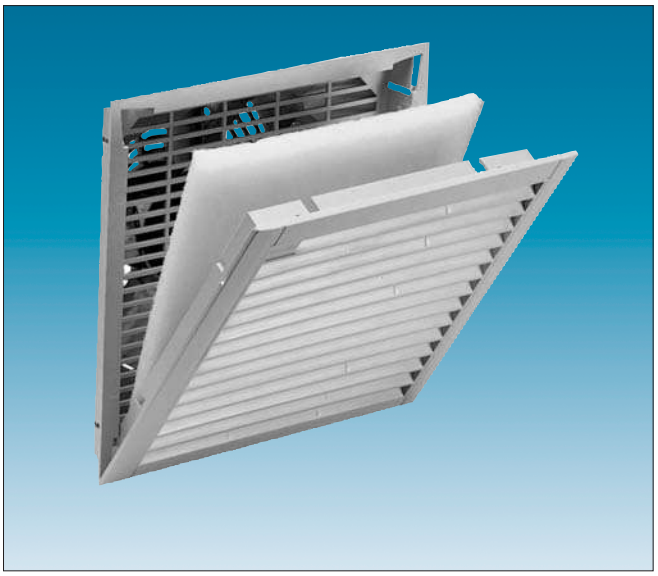

- Maintains a NEMA 12 seal against enclosure
- UL Recognized to UL 508a, category NITW2/8, UL File #E175229, CE approved for European use
- Patented “Click & Fit” design provides a hardware free installation!
- Plastic made from strong, heat resistant (ABS-FR), UL 94 VO fire approved material

Options: Light Grey, Beige or Black Grills

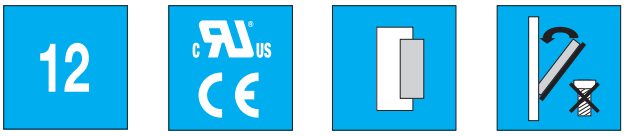

NEMA Rating | Approvals | Mounting | Mounting

Technical data:	PFA 1000	PFA 2000	PFA 25/3000	PFA 5/6000
Filter density (g/m²)	150	150	150	150
Filtration efficiency	73%	73%	73%	73%
Outside Dimensions (mm)	105 x 105 x 10	150 x 150 x 27	250 x 250 x 30	325 x 325 x 30
Construction Material	sprayed thermoplastic (ABS-FR), self-extinguishing UL 94 VO			
Standard Colors	RAL 9011 (black) or RAL 7032 (beige)			
NEMA Rating	NEMA 1/ IP 43	NEMA 12 / IP 54		

PFA 1.000

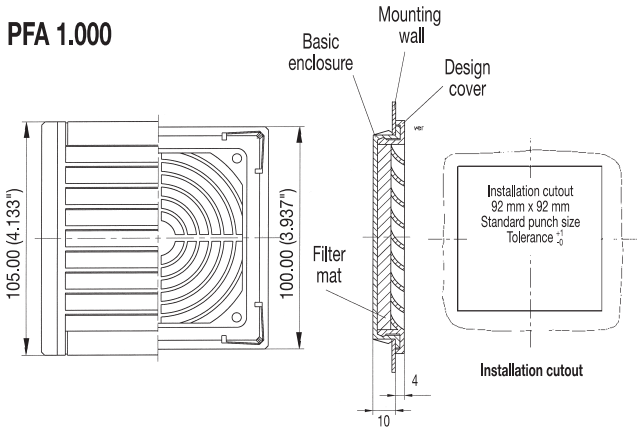

PFA 2.000

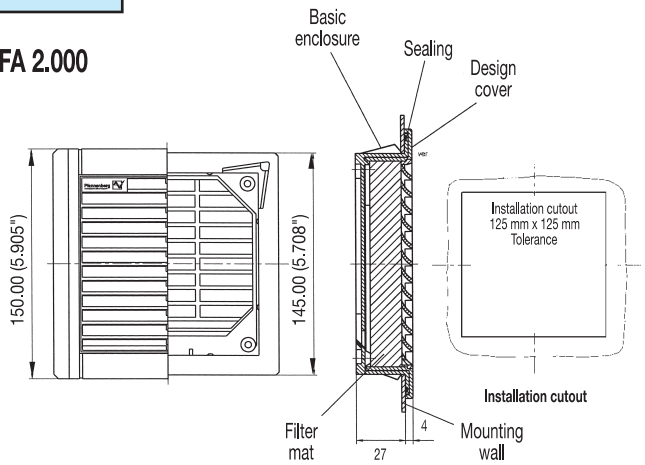

PFA 3.000

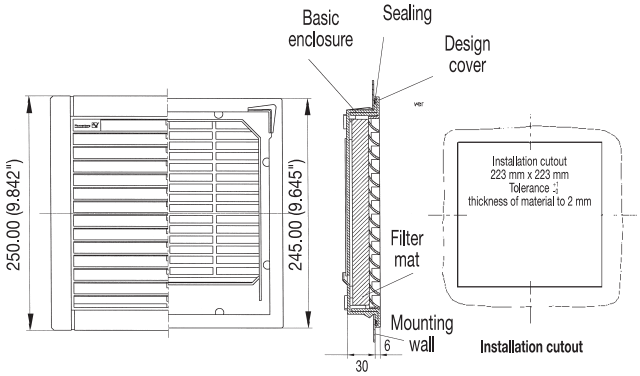

PFA 6.000

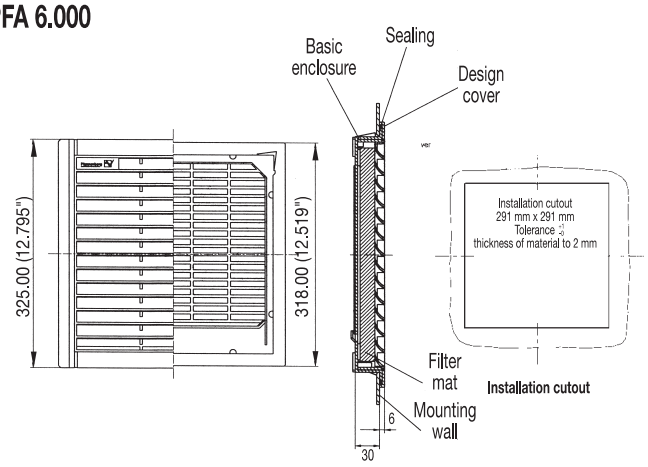

NEMA 3R Filterfan® Rainhoods

Pfannenberg
ELECTRO-TECHNOLOGY FOR INDUSTRY

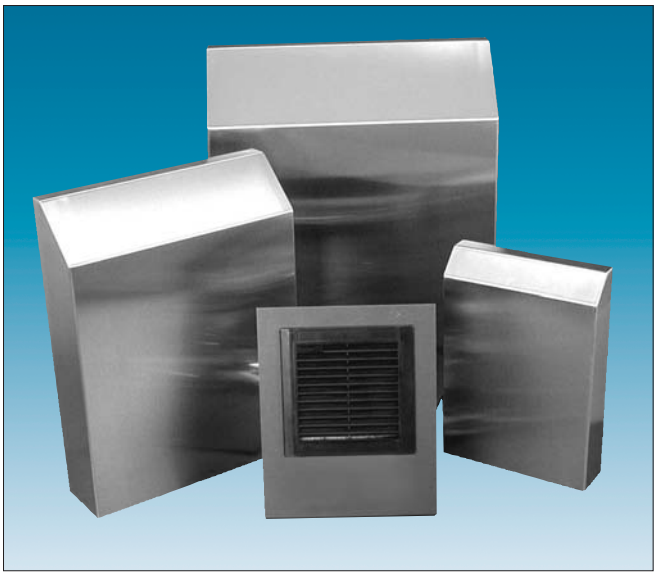

- NEMA 3R / Outdoor Rainhoods for 3rd and 4th Generation Filterfans®
- Fits PF/PFA 2000, 25/3000, 5/6/7000 3rd Generation Units
- Fits PF/PFA 20000, 40000, 60000 4th Generation Units
- 304 Stainless Steel or Powder Coated Steel Options
- Due to dust and vapor, a true NEMA 4 rating should be allowed for open loop systems

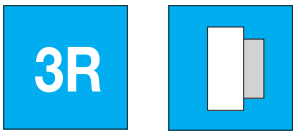

NEMA Rating

Mounting

Mechanical data: PF-RH-2000 & PF-RH-25/3000

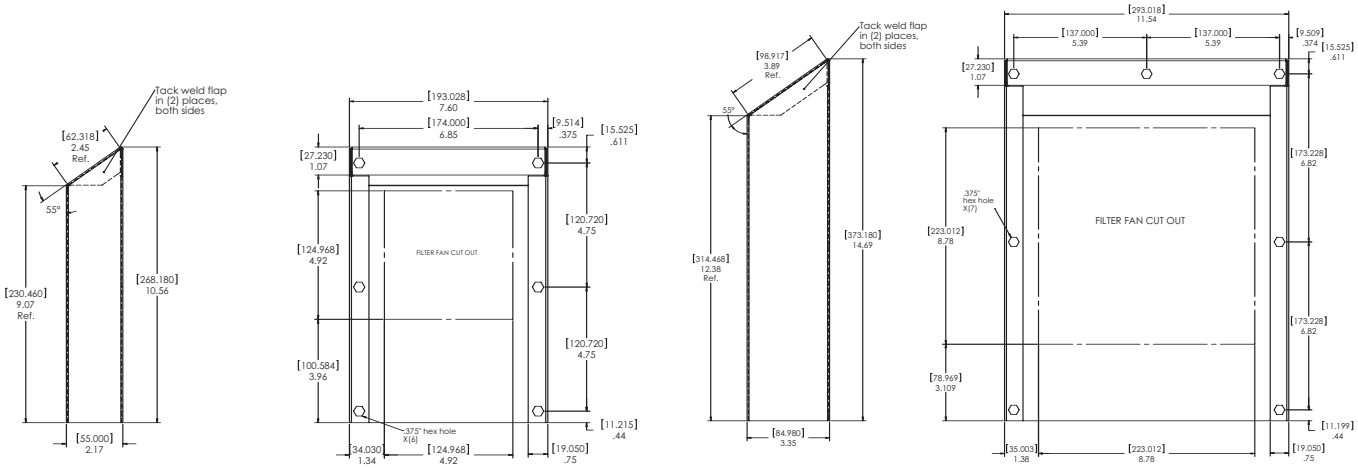

Mechanical data: PF-RH-5/6/7000

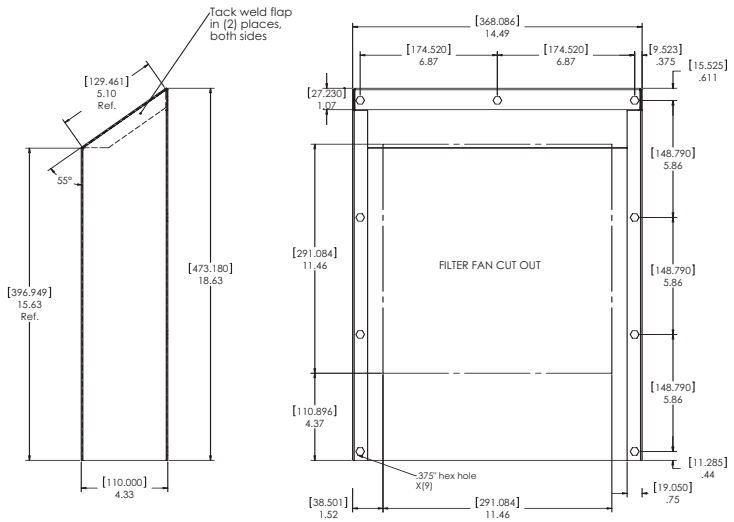

Panel Fans



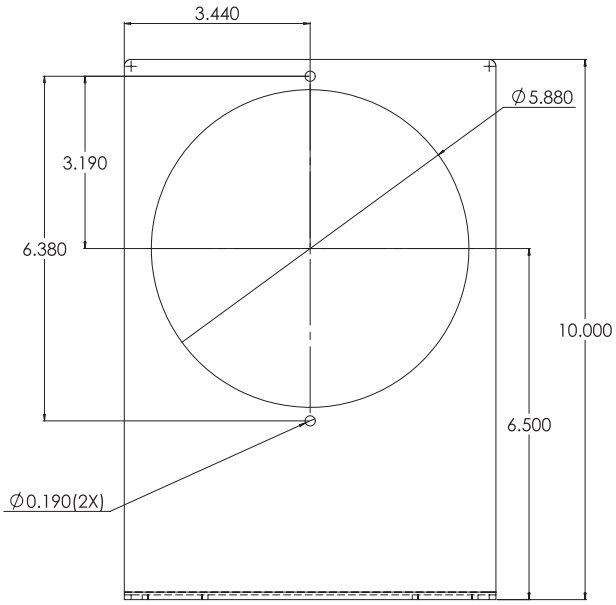

Mechanical data: PFP-BK200 shown (bracket sold separate)

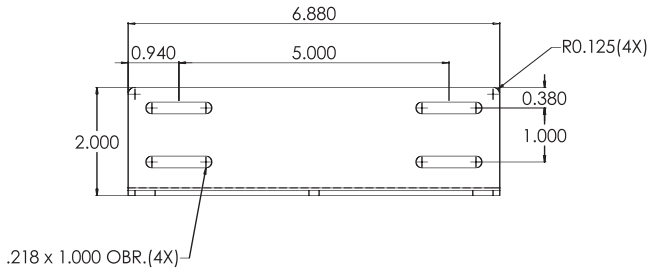

Air Flow data:	PFP 100	PFP 200	PFP 500
Free flow air delivery	106	230	550
Ambient temperature °F (Max/Min)	122/14	122/14	122/14
Max. relative humidity (rH)	90%		
Duty cycle	100%		

Electrical data:	PFP 100	PFP 200	PFP 500
Rated voltage	115V / 230V	115V / 230V	115V / 230V
Rated frequency	50/60Hz (Fan CFM based on 115V 60Hz performance)		
Power consumption	18 Watts	24 Watts	60 Watts
Current draw	0.18A / 0.09A	0.29A / 0.15A	0.5A / 0.25A
Connection Method	Power Cable		

Supplementary data:	PFP 100	PFP 200	PFP 500
Weight (without packaging)	1.2 lbs	2.0 lbs	4.4 lbs
Bracket model No.	PFP-BK 100	PFP-BK 200	PFP-BK 500
Finger guard model No.	PFP-FG 100	PFP-FG 200	PFP-FG 500
Standard supply includes	1 finger guard, power cable and mounting hardware (no bracket supplied)		