THE INFORMATION CONTAINED IN THIS DRAWING IS THE SOLE PROPERTY OF L-COM, INC. ANY REPRODUCTION IN PART OR WHOLE WITHOUT THE WRITTEN PERMISSION OF L-COM, INC. IS PROHIBITED.

REVISIONS			
REV	DESCRIPTION	DATE	APPROVED
A	REV A DRAWING RELEASED	12/07/2018	SLI

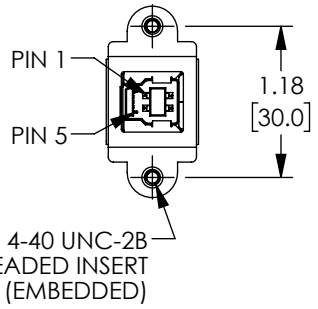

"J1"
USB 3.0 SERIES "B" JACK
PANEL MOUNT
CONTACTS 30µ GOLD

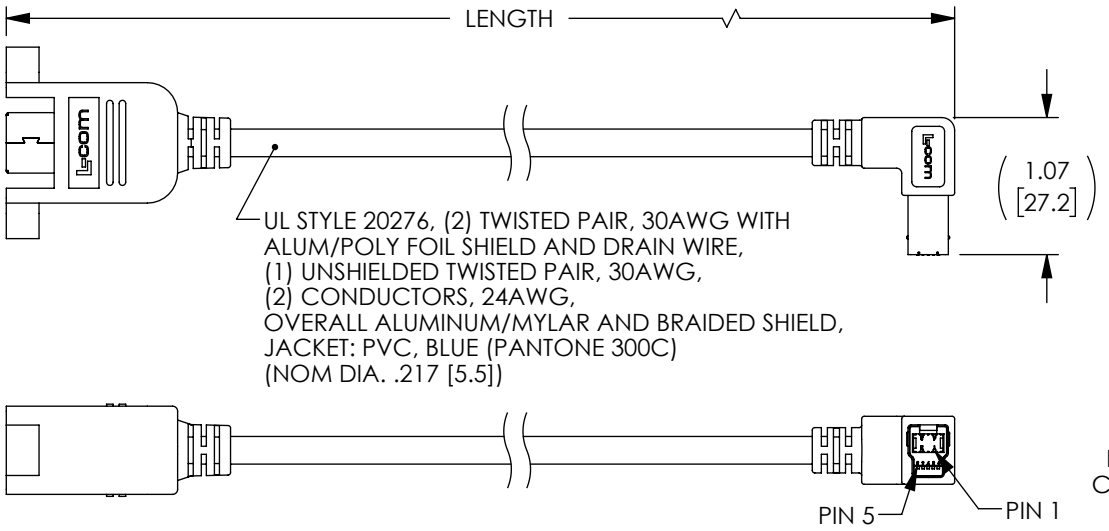

"P1"
USB 3.0 SERIES "B"
RIGHT ANGLE PLUG
CONTACTS 30µ GOLD

"J1" WIRING MAP "P1"

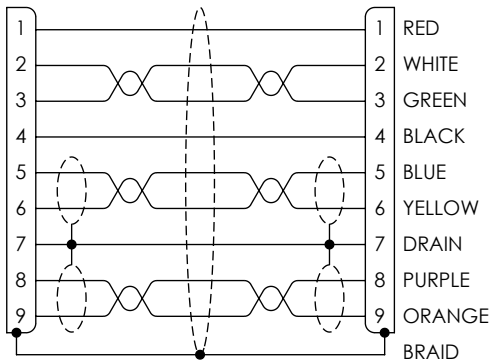

PART NUMBER	LENGTH METERS [FEET]
U3A00102-03M	0.3 [.98]
U3A00102-05M	0.5 [1.64]
U3A00102-1M	1.0 [3.28]

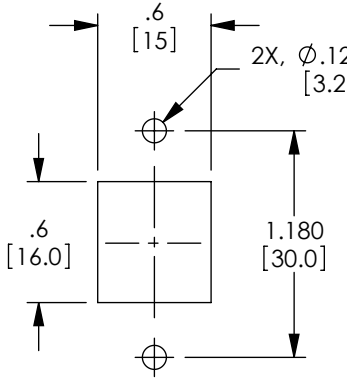

RECOMMENDED
PANEL CUTOUT

NOTES:

1. CABLE ASSEMBLY SHALL HAVE 360° SHIELD TERMINATION.
2. CABLE ASSEMBLY SHALL BE TESTED FOR CONTINUITY.
3. CABLE ASSEMBLY SHALL BE INDIVIDUALLY PACKAGED IN ACCORDANCE WITH L-COM SPECIFICATION PS-0031.

REGULATORY COMPLIANCE:
CE2011/65/EU(RoHS DIRECTIVE)

UNLESS OTHERWISE SPECIFIED,
DIMENSIONS ARE IN INCHES [mm]
OVERALL CABLE LENGTH TOLERANCE:
≤12 [305] = +1 [25] / -0
>12 [305] ≤60 [1524] = +2 [51] / -0
>60 [1524] ≤120 [3048] = +4 [102] / -0
>120 [3048] ≤300 [7620] = +6 [152] / -0
>300 [7620] = +5% / -0%
ALL OTHER DIMENSIONAL TOLERANCES:
.X = ± .2 [5.08]
.XX = ± .02 [.51]
.XXX = ±.005 [.13]
PROJECTION

APPROVALS	DATE
DRAWN BY SLI	03/28/2018
CHECKED BY BZHANG	03/28/2018
APPROVED BY SPAN	03/28/2018

CONFIGURATION DETAILS OF UNDIMENSIONED FEATURES MAY VARY

COLOR VARIATIONS MAY OCCUR

L-COM Global Connectivity
50 HIGH STREET
NORTH ANDOVER, MA
01845

CATEGORY
USB

PRODUCT DESCRIPTION
CA,USB3.0 B-F PNL/90RT B-M

SIZE	FSCM NO.	DWG. NO.	REV.
A	43321	U3A00102	A

SCALE: NONE | CAD FILE: U3A00102.SLDDRW | SHEET 1 OF 1