# Bourdon tube pressure gauge, liquid filled
# Type 213.40.0XX
# Item no.: 9910905

| Description | |
|---|---|
| Design according | EN 837-1 |
| Accuracy class | class 1.6 |
| Scale range | 0...25 bar |
| **Constructional design** | |
| Process connection | G 1/4 B |
| Connector location | lower mount |
| Pressure element | Copper alloy |
| Movement | Copper alloy |
| Case | black forged brass with pressure vent |
| Nominal size | 063 mm |
| Case filling | glycerine |
| pointer | Aluminium black |
| Window | acrylic (PMMA) |
| Dial | Plastic white |
| **Operating conditions** | |
| Pressure limitation | Steady: 3/4 x full scale value<br>Fluctuating: 2/3 x full scale value<br>Short time: Full scale value |
| Permissible ambient temperature | -20 ... +60 °C |
| Permissible medium temperature | +60°C maximum |
| Temperature effect when the temperature deviates from the reference temperature (+20°C) | Max. +-0.4 %/10 K of the span |
| Ingress protection | IP 65 |

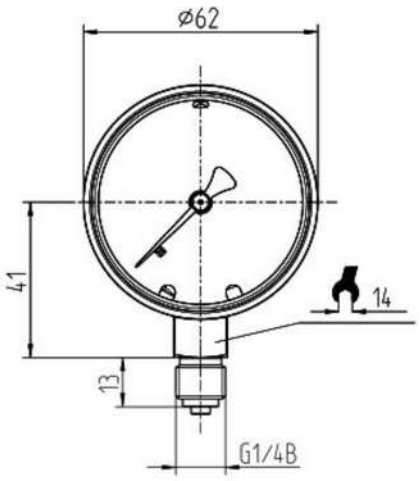


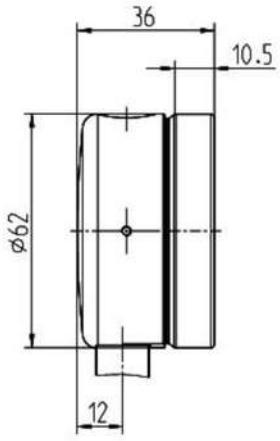




WIKA Instruments – 38 Avenue du Gros Chêne – 95220 HERBLAY
Phone0 820 95 10 10
info_fr@wika.com • http://www.wika.fr