JUBOFLEX ®
WITH SEPARATE HUB

***	Torsional flexibility	**	Radial flexibility	***	Axial flexibility	***	Conical flexibility



DESCRIPTION

Flexible element

❶ Precompressed natural rubber.
❷ Bonded metal spacers.
❸ Precompression band (to be removed after installation).

- Flange

❹ Die-cast steel specially bored to fit the separate hub.
❺ Universal separate hub (not supplied by PAULSTRA).

OPERATION

In addition to the characteristics described above, the separate hub used in conjunction with the JUBOFLEX coupling provides the advantage :

- Ready to assemble without machining the flanges.

Advantages
- Reduced size.
- Simplified axial positionning.
- Easy to assemble and disassemble.
- Reduction of costs by simplifiying the machining required for the shafts and flanges.

Recommendation
- In use, precompression is achieved by the fixing bolts and the JUBOFLEX coupling operates without the precompression band round the flexible element.

DIMENSIONS

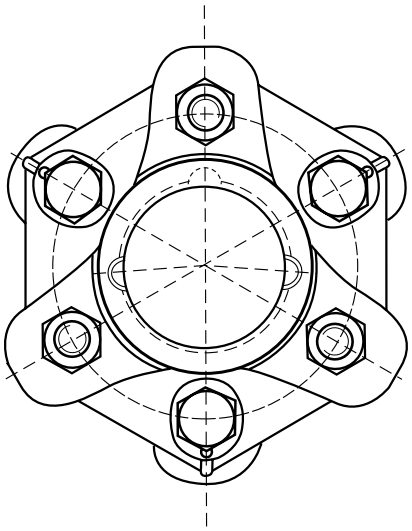

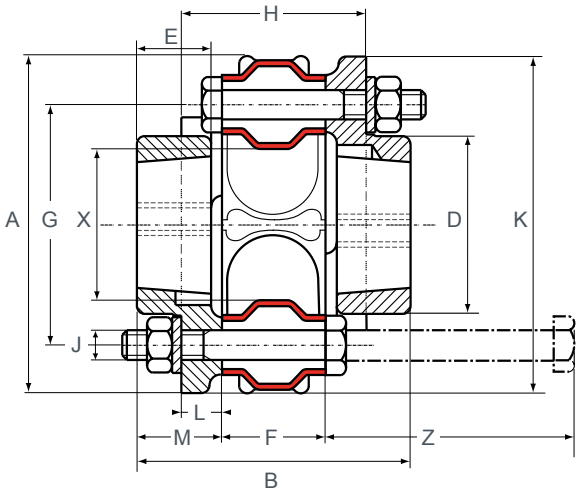

Ref.	Nominal torque (N.m)	Max torque (N.m)	Max speed (rpm)	Separate hub*	A (mm)	B (mm)	D (mm)	E (mm)	F (mm)	G (mm)	H (mm)	J (mm)	K (mm)	L (mm)	M (mm)	X (mm)	Z (mm)	Weight (kg)
632205	40	120	6 000	SEE PARTS LIST	91	74	48	20	28	65	54	8	91	11	23	23	65	0,8
632210	90	270	5 000		117	90	60	25	32	85	65	10	121	14	29	35	75	1,6
632217	160	480	4 500		142	106	70	25	46	100	81	12	140	17	30	40	90	2,7
632226	250	750	3 500		181	121	95	30	51	132	91	14	177	21	35	63	100	5

1 N.m ≈ 0,1 mkg

Please see current price list for availability of items.

*** For shaft diameters, please refer to the hub manufacturers' specifications.**

The maximum torque is considered to be an infrequent start-up torque and is not periodic.

For higher nominal torque see “Juboflex S”.

PARTS LIST

The flexible elements are delivered precompressed using a precompression band which should be removed after installation.

Coupling Reference	Flexible Element		Flange		Separate hub	
	Reference	Qty	Reference	Qty	Current Reference	Universal Reference
632205	**632502**	1	321316	2	28 - 20	11 - 08
632210	**632503**	1	321326	2	30 - 25	12 - 10
632217	**632505**	1	321336	2	40 - 25	16 - 10
632226	**632507**	1	321346	2	50 - 30	20 - 12

OPERATING LIMITS

POWER RANGE

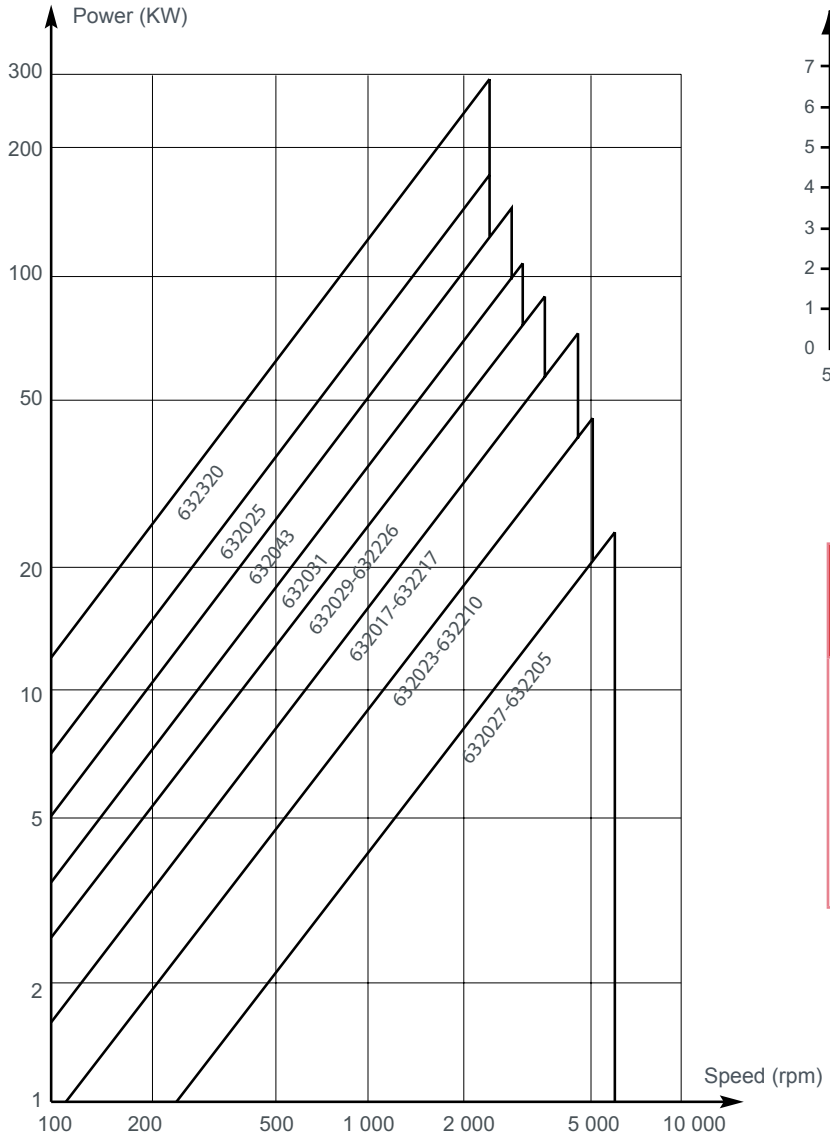

CONICAL MISALIGNMENT

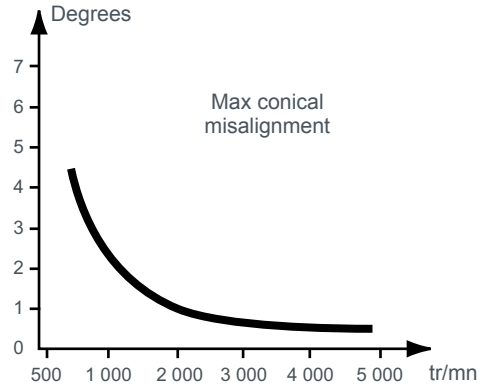

RADIAL DISPOSAL

Nominal torque N.m	Radial misalignment at 1,500 rpm
40	0,7 mm
90	0,9 mm
160	1,4 mm
250	1,5 mm
350	1,8 mm
500	2,0 mm
700	2,1 mm
1 200	2,4 mm

OPERATING CHARACTERISTICS

Nominal torque (N.m)	Vibratory coupling (N.m)	Torsion under NT (degrees)	Stiffness			
			Axial (Dan/Mm)	Radial (Dan/Mm)	Torsional (M.kn/Rad.)	Conical (M.kn/Rad.)
40	20	8	6	20	0,285	0,04
90	45	8	8	30	0,57	0,057
160	80	8	11	45	1,14	1,143
250	125	7	11,5	30	2,12	0,57

1 N.m ≈ 0,1 mkg

Please see current price list for availability of items.

ASSEMBLY

- Precompression for the initial installation is achieved by a band ❸ placed round the outside (our flexible elements are delivered with this band).

- Position the flexible element with its band to attach three non-adjacent holes to the three arms of one flange, and then the three other holes to the other flange.

- Tighten the bolts to the following torques :

Reference	Nominal torque TCN (N.m)	Torque value (N.m)
632027/632205	40	21
632023/632210	90	41
632017/632217	160	72
632029/632226	250	113
632031	350	240
632043	500	350
632025	700	350
632320	1 200	350

- Cut the original band or remove the disassembly band.

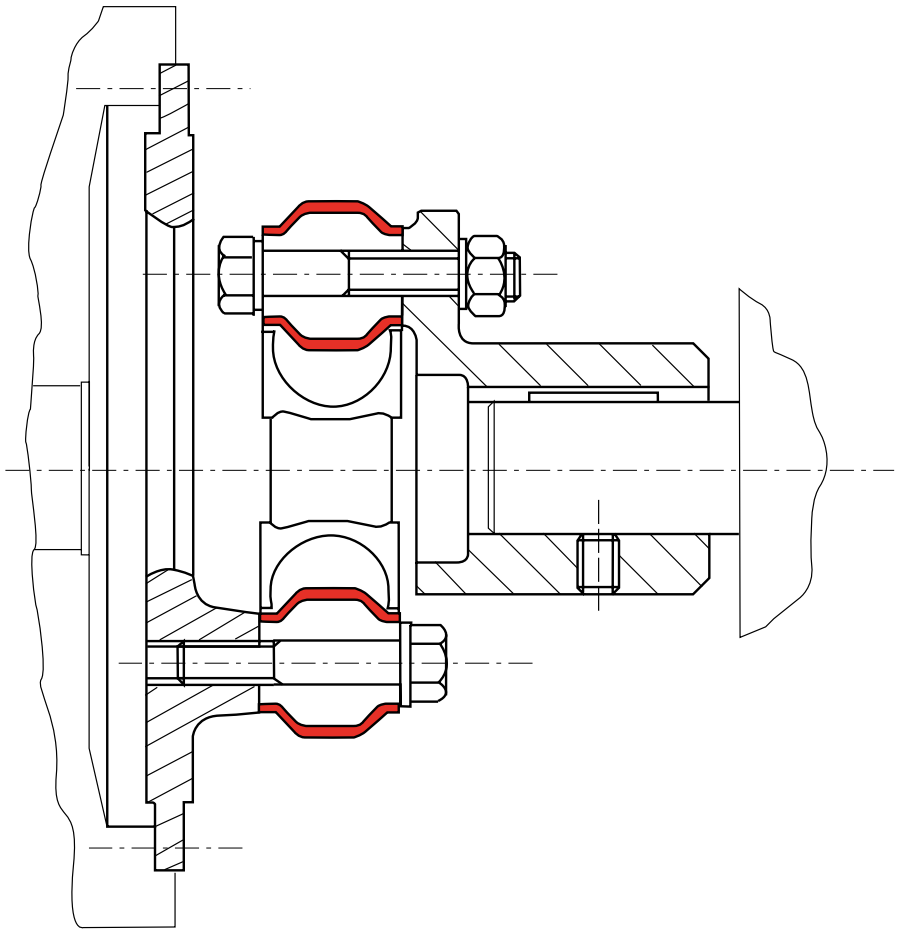

Example : internal combustion engine/generator coupling mounted on a ring attached to the fly wheel.