TECHNICAL DATA

Absolute Multiturn Safety Motor Feedback Encoder AM34
Standard Performance for Servo Motor and Drive





- Low-profile absolute multiturn encoder for standard and functional safety motion control
- Very compact absolute multiturn encoder with mounting depth less than 20 mm
- High Resolution 14 bit up to 20 bit Singleturn + 12 bit Multiturn
- Digital BiSS-C, SSI interface
- Analogue output for Functional Safety monitoring
- Encoder for Functional Safety applications (SIL2 PLd, SIL3 PLe, category 3)
- Wide operating temperature range up to +115°C
- Speed up to 12 000 rpm - without self-heating due to bearing less design
- Electronic Data Sheet (EDS) - Motor and drive data can be stored inside encoder
- Encoder temperature sensor *(BiSS-C)*

TECHNICAL DATA
mechanical

Housing diameter	38 mm
Shaft	cone 1:3, M4 screw
Mounting depth	≤20 mm, with plug ≤22 mm
Mounting flange	Direct flange/shaft mount
Protection class shaft input	- IP20
Protection class housing	- IP20
Axial endplay of mating shaft	±0.5 mm max. @ nominal position
Max. speed	12 000 rpm
Starting torque typ.	n/a
Moment of inertia	0.4 kgmm² (rotor with screw M4x30)
Max. angular acceleration	100.000 rad/sec²
Vibration resistance (DIN EN 60068-2-6)	300 m/s² (10 … 2 000 Hz) 100 m/s² (10 … 2 000 Hz) min.
Shock resistance (DIN EN 60068-2-27)	1000 m/s² (6 ms)
Material shaft	Stainless steel
Material housing / cover	Aluminum / plastic
Weight	50g
Connection (with strain relief)	ECU Interface - PCB connector axial
Operating temperature [1]	-40°C ... +115°C
Storage temperature	-30°C ... +80°C

[1] see measuring point M1, dimensional drawings page 4.

TECHNICAL DATA

Absolute Multiturn Safety Motor Feedback Encoder AM34
Standard Performance for Servo Motor and Drive

TECHNICAL DATA electrical

General design	as per EN IEC 61010-1, protection class III, contamination level 2, overvoltage class II
Supply voltage	5 V DC +5%/-5%, GND
Power consumption	0.6 W
Resolution singleturn **other resolution on request*	16 Bit - standard performance 18 Bit - advanced performance 20 Bit - high performance
Resolution multiturn	12 Bit multiturn - mechanical gear box
Resolution incremental signals	512 periods sine+cosine *(SinCos)* or AB signals 512 ppr
Electrical Interface	RS422 - BiSS-C or SSI *(Clock, Data),* 1Vpp - sine+cosine *(SinCos); TTL - AB incremental*
Data Protocol	BiSS-C / SSI gray / SSI binary
Electronic Data Sheet (EDS)	512 bytes of storage for encoder data (BiSS-C only)
OEM Memory	Additional storage for motor-, drive data (BiSS-C)
Absolute accuracy (typ.)	±0.033° / ±2' / ±120'' *(after autocalibration[2])*
Repeatability (typ.)	±0.0055° / ±0.33' / ±20'' *(after autocalibration[2])*

[2] follow the instructions in the manual for automatic adjustment features on command (see BiSS-C encoder adjustment)

TECHNICAL DATA safety

Functional Safety Design	SIL2, SIL3 according to EN IEC 61508, 62061, 61800-5-2/-3 PLd, PLe according to EN ISO 13849-1
Functional Safety Architecture	Encoder(SR) with two independent channels: ◊ First channel: absolute *(SSI or BiSS-C)* and ◊ Second channel: incremental *(SinCos)* output signals according to EN IEC 61800-5-3
Electrical Interface	1Vpp differential signals @50% of supply voltage *(SinCos)* RS485 - SSI or BiSS-C *(Clock, Data)*
Resolution for Safety Function	8 bit single turn, based on 512 sine+cosine or A/B periods
PFH-value	13.7 x 10-9 per hour
MTTFd	*299 years*
DCavg	*90%*
The encoder can support the following Safety Drive Functions according IEC 61800-5-2	Safety function based on speed and acceleration: SS1 Safe Stop 1 [1)] SS2 Safe Stop 2 [1)] SOS Safe Operation Stop SDI Safe Direction SLS Safe Limited Speed SMS Safe Maximum Speed SLI Safe Limited Increment SLA Safe Limited Acceleration SSR Safe Speed Range SAR Safe Acceleration Range [1)] deceleration controlled (-d) or ramp monitored (-r)
Safety evaluation	see Implementation Guide and User Manual "D-582-031"

TECHNICAL DATA

Absolute Multiturn Safety Motor Feedback Encoder AM34
Standard Performance for Servo Motor and Drive

TECHNICAL DATA
features

Cycle time *(Frame Repetition)*	*≥ >* 30 µsec
Propagation delay /latency	*≤ 0.25 µsec*
Signal stabilization	Signal stabilization by auto-gain with monitoring
Compensation of misalignment	Automated adjustment during installation
Commutation	Adjustable zero position

ELECTRICAL CONNECTIONS
SSI / BiSS-C / Incremental

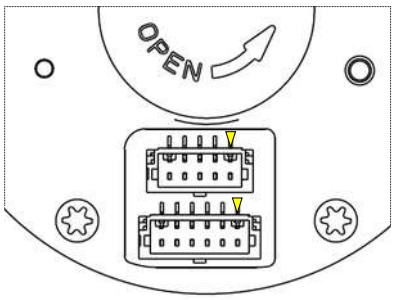

PCB-Connector[2]			
Type	**T1M-06-GF-S-V-K-TR**	***Type***	**T1M-05-GF-S-V-K-TR**
PIN	***Signal SSI / BiSS-C (absolute)***	***PIN***	***Signal 1Vpp or TTL (incremental)***
▽ 1	**VDD**	▽ 1	**B+** *(COS+ or B+)*
2	**GND**	2	**B-** *(COS– or B-)*
3	**DATA-** *(RS422)*	3	**GND**
4	**DATA+** *(RS422)*	4	**A+** *(SIN+ or A+)*
5	**CLOCK–** *(RS422)*	5	**A-** *(SIN– or A-)*
6	**CLOCK+** *(RS422)*		

Pin assignment to interface signal

Insulation resistance according to EN IEC 60204-1 PELV/SELV
[2] SAMTEC T1M / ISS1 / S1SST

ACCESSORIES
Connection Cables

Connection cable - SSI / BiSS-C / Incremental	**Part Nr.**
Absolute signals cable, 20 cm, 6-pin (S1SST-06-28-GF-08.00-S)	3 561 128
Incremental signals cable, 20 cm, 5-pin (S1SST-05-28-GF-08.00-S)	3 561 127

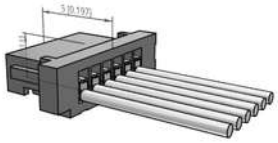

3 561 128 S1SST-06-28-GF-08.00-S
monochrome (all wires are blue)

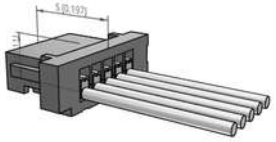

3 561 127 S1SST-05-28-GF-08.00-S
monochrome (all wires are blue)

TECHNICAL DATA

Absolute Multiturn Safety Motor Feedback Encoder AM34
Standard Performance for Servo Motor and Drive

DIMENSIONAL DRAWINGS

8 mm shaft, cone 1:3, D38/C33, M4 screw

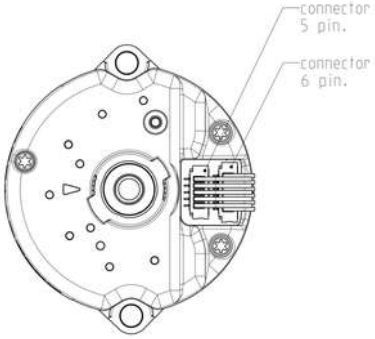

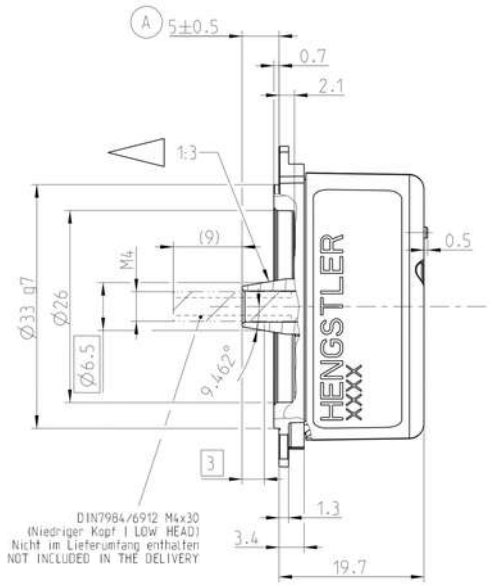

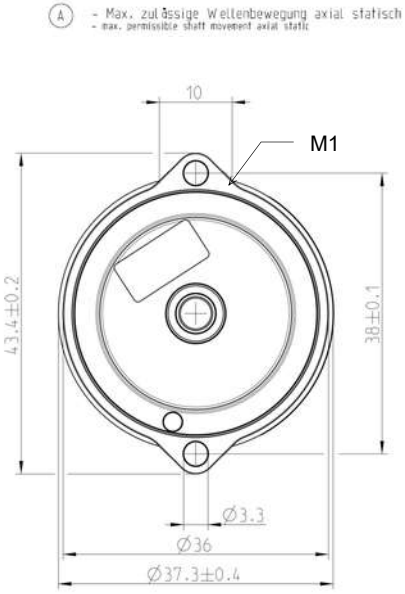

INSTALLATION REQUIREMENTS

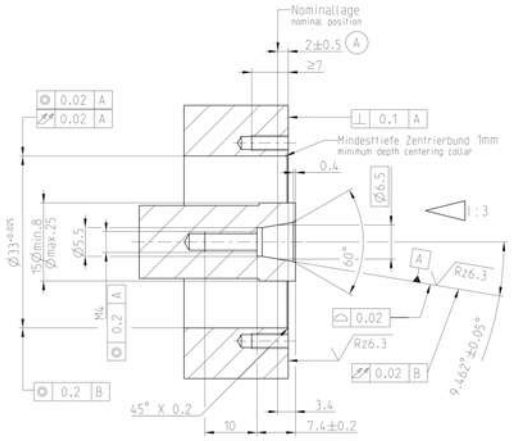

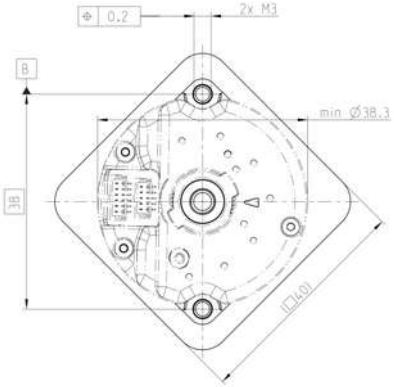

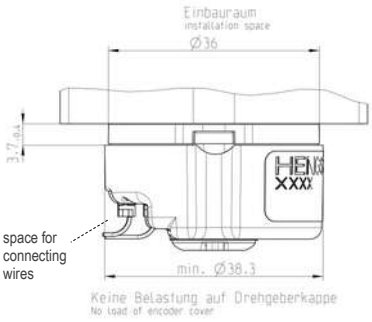

Note: space for connecting wires are considered at the encoder. With a small bending radius (max. R2.7), the connection remain within the encoder outer contour.

Dimensions in mm
Tolerances according DIN ISO 2768-m

PLUG OPTIONS

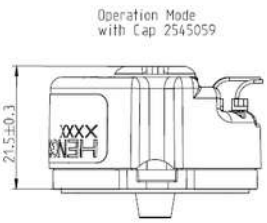

E2545059

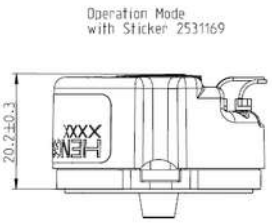

E2531169

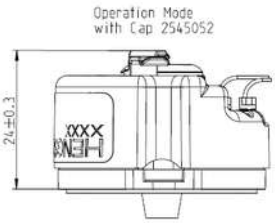

E2545052

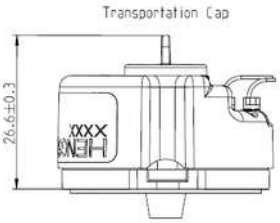

Specifications subject to change without notice.

TECHNICAL DATA

Absolute Multiturn Safety Motor Feedback Encoder AM34
Standard Performance for Servo Motor and Drive

ORDERING INFORMATION

Type[3]	Resolution[4]	Supply voltage	Flange, Protection, Shaft	Interface[5]	Connection
AM34S **AM34E**	**0016** 16 Bit ST **0018** 18 Bit ST **0020** 20 Bit ST **1216** 16 Bit ST + 12 Bit MT **1218** 18 Bit ST + 12 Bit MT **1220** 20 Bit ST + 12 Bit MT	**A** 5 VDC	**Z.0T** 2-eared flange D38/ C33, IP20, 8 mm cone-shaft 1:3, M4	**BU** BiSS-C+SinCos 1Vpp **BZ** BiSS-C+A/B TTL **SU** SSI gray+SinCos 1Vpp **ST** SSI binary+SinCos 1Vpp **SZ** SSI gray+A/B TTL **SY** SSI binary+A/B TTL	**4** Absolute signals & power supply, 6 pole connector, axial Incremental signals, 5 pole connector, axial (available according to interface)

[3] Type: AM34S: Functional Safety (SIL2, PLd)
AM34E: Functional Safety (SIL3, PLe)
[4] Other resolution on request
[5] Analog Sin/Cos signals (512 periods sine+cosine)
Incremental A/B signals TTL (512 ppr), resolution is specified at the end of product code ("|0512")
Other interface on request

ACCESSORIES
Plug Options



Transport plug

options to close the cap

Sticker / Plug	Part Nr.
Sticker to close the cap	E2531169
Plug to close the cap	E2545059
Plug with wire guides to close the cap	E2545052



E2531169



E2545059



E2545052

TECHNICAL MANUALS

Documentation	Ordering code
Implementation Guide and User Manual, English	D-582-031
Installation Instructions, English	D-582-034
Assembly Instructions, English	D-582-037
Software	**Ordering code**
AM34 Service Tool (for configuration, for calibration)	on request

Specifications subject to change without notice.

Absolute Multiturn Safety Motor Feedback Encoder AM34
Standard Performance for Servo Motor and Drive

TECHNICAL DATA
electrical interface SSI

Standard SSI Protocol Frame	
Bit Length	**Description**
0 or 12	Multiturn position
16	Singleturn position
SSI gray	Code

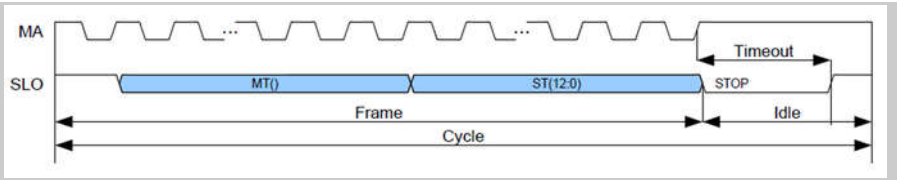

SSI Timing				
Symbol	**Parameter**	**Min.**	**Max.**	**Unit**
t_{frame}	Permissible Frame Repetition	30	unlimited	µs
$1/t_C$	Permissible Clock Frequency	0.1	1	MHz
t_{L1}	Clock Signal hi Level Duration	250	t_{OUT}	ns
t_{L2}	Clock Signal lo Level Duration	250	t_{OUT}	ns
t_{RQ}	REQ Signal lo Level Duration	50		ns
t_{OUT}	Slave Timeout	16	24	µs
t_{P3}	Propagation Delay *(SLO stable after MA lo→hi)*	60	250	ns

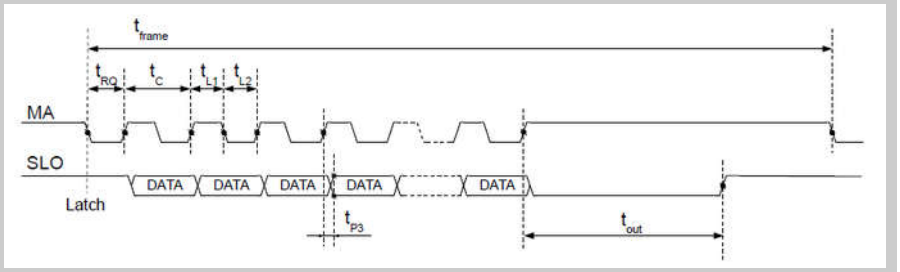

Recommended input circuit Standard SSI or BiSS-C to 10 MHz clock rate

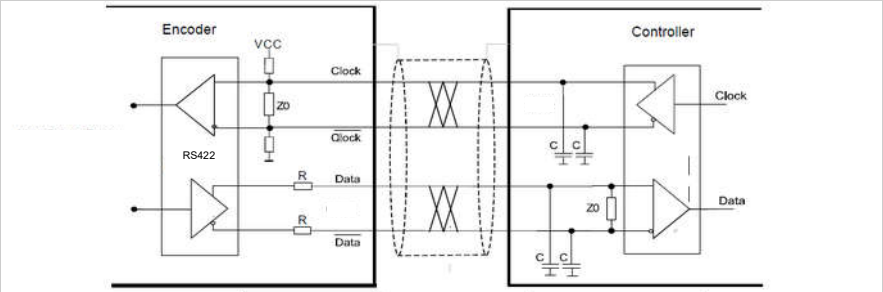

Dimensions: R = 10 Ω , Z0 = 120 Ω, C = 100pF *(if needed)*

Cable Length[1]	**SSI Clock Frequency**	**BiSS-C Clock Frequency***
< 25 m	< 1 MHz	< 10 MHz
< 50 m	< 400 kHz	< 10 MHz
< 100 m	< 300 kHz	< 10 MHz
< 200 m	< 200 kHz	**Details for BiSS-C see page 6 ff.*
< 400 m	< 100 kHz	

[1] *Twisted pair wiring with ground shield on both sides recommended.*

Art. No.: D-582-049
Edition: 3-200525-MB

© Hengstler GmbH Uhlandstr. 49 D-78554 Aldingen/ Germany
☎+49 74 24 -89 0 Fax +49 74 24 - 89 500
E-Mail: info@hengstler.com Internet: www.hengstler.com

Absolute Multiturn Safety Motor Feedback Encoder AM34
Standard Performance for Servo Motor and Drive

TECHNICAL DATA
electrical interface BiSS-C

BiSS-C Protocol Frame

Bit Length	Description
0 or 12	Multiturn position
16, 18 or 20	Singleturn position
1	Error bit nERR (active low)
1	Warning bit nWARN (active low)
0	Sign-of-life counter (LC)
6	CRC (6-bit CRC polynomial: $X^6 + X^1 + X^0$)

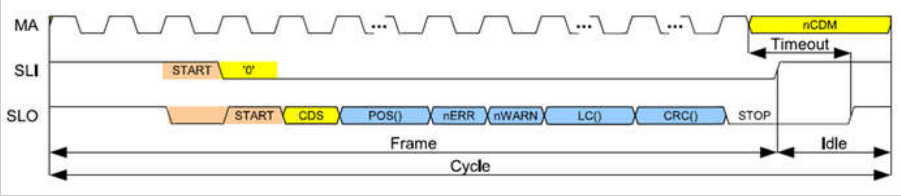

BiSS-C Timing

Symbol	Parameter	Min.	Max.	Unit
t_{frame}	Permissible Frame Repetition	30	unlimited	µs
$1/t_C$	Permissible Clock Frequency	0.1	10	MHz
t_{L1}	Clock Signal hi Level Duration	25	t_{OUT}	ns
t_{L2}	Clock Signal lo Level Duration	25	t_{OUT}	ns
t_{busy}	Processing Time with Start Bit Delay		6 t_C	ns
t_{OUT}	Adaptive Slave Timeout (t_{init} = 1.5 t_{MA}) *	0.1	24	µs
t_{P3}	Propagation Delay: SLO stable after MA lo→hi	60	250	ns

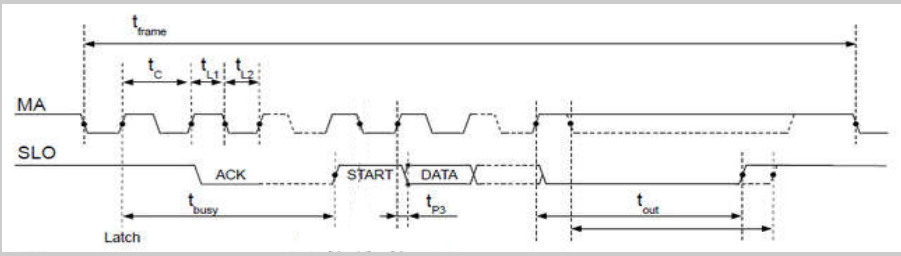

*Adaptive Slave Timeout:
(t_{init} measured as first 1.5 · t_{MA} each frame)

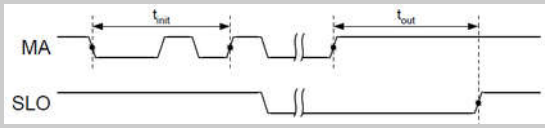

TECHNICAL DATA

BiSS-C Interface
- Register assignment

Table of register assignment

Address (Hex)	Name	Size	Memo
0x00..0x3F	Registerbank	64 Bytes	
0x40	**Bankselection**	0..8 Bits (1 Byte)	1)
0x41	EDS-Bank	0..8 Bits (1 Byte)	1)
0x42..0x43	ProfileID	16 Bits (2 Bytes)	3)
0x44..0x47	Serialnumber	32 Bits (4 Byte)	3)
0x4E..0x4F	Temperature sensor	16 Bits (2 Bytes)	4)
0x77	Command register	0..8 Bits (1 Byte)	2)
0x78..0x7A	DeviceID	24 Bits (3 Bytes)	3)
0x7B..0x7D	Production Date	24 Bits (3 Bytes)	3)
0x7E..0x7F	ManufacturerID	16 Bits (2 Bytes)	3)

1) Bank selection e.g. for Encoder-Profile and BiSS-Identifier.
2) Supported commands see below.
3) The value is saved as a Big Endian, i.e. with the highest-value byte at the lowest-value address.
4) Temperature value [°C] = $XXXX_{(signed)}/10$

Bank selection
The bank selection register at address **0x40** selects a register bank consisting of up to 0x27 (39_{dec}) banks and displays these at the register addresses 0x00 to 0x3F.
- Bank 0x0E: Encoder-Profile and BiSS-Identifier; - Bank 0x24: EDS BiSS Interface data;
- Bank 0x25: EDS Encoder data; - Bank 0x26...0x27 OEM data

In order to send a **Command to the encoder**, the command (CMD) must be written into **register 0x77**.
Example for command "Preset": Write the value 0x88 (MTST_PRESET_STORE) to the address 0x77. This sets the total position value (single and multiturn) to 0.

BiSS-C Interface
- Commands

COMMANDS

CMD (7:0) Addr. 0x77; bit7:0 default: 0x00

Code	Name	Description
0x41	CONF_WRITE_ALL	Write current configuration of all banks to EEPROM. This includes the RPL information for all banks and the RPL information for the EEPROM. Valid CRC checksums are always calculated automatically beforehand for all banks.
0x88	MTST_PRESET_STORE*	Store the preset position for singleturn and multiturn into EEPROM.
0x89	MT_PRESET_STORE*	Store the preset position for singleturn and multiturn into EEPROM.
0xB0	AUTO_ADJ_ANA*	Automatic analog adjustment. -> Duration in seconds = 900/speed in rpm.
0xB1	AUTO_ADJ_DIG*	Automatic digital radjustment (in-field). -> Duration in seconds = 1200/speed in rpm.
0xB3	AUTO_ADJ_ECC*	Automatic eccentricity adjustment. -> Duration in seconds = 15360/speed in rpm.
0xFF	<NOP_FAIL>	<Return-code: last operation failed>

(*) Refer to document D-582-037 - Assembly instruction

Absolute Multiturn Safety Motor Feedback Encoder AM34
Standard Performance for Servo Motor and Drive

TECHNICAL DATA
BiSS-C Identifier
Encoder-Profile

Encoder-Profil and BiSS-Identifier

Register	Value (HEX)	Category	Description
0x41	0x24	Profile	First Bank of Electronic Data Sheet (EDS)
0x42	0x62		BiSS Profile ID: Position Data
0x43	0xXX		BiSS Profile ID: Data with Error and Warning (w/o CRC) e.g. 12bit MT + 24bit ST + ErrorBit + WarningBit -> 38 bits => 0x26
0x44	0xXX		Serial number: 7 digits production identifier + 3 digits sequence number (max. 2^{32})
0x45	0xXX		
0x46	0xXX		
0x47	0xXX		
0x78	0xXX	BiSS Identifier	Encoder part number (max. 2^{32}) DeviceID: e.g. $0582042_{(DEC)}$ -> $08E19B_{(HEX)}$
0x79	0xXX		
0x7A	0xXX		
0x7B	0xXX		Production date: Day (BCD format)
0x7C	0xXX		Production date: Month (BCD format)
0x7D	0xXX		Production date: Year (BCD format)
0x7E	0x48		Manufacturer ID: Hengstler -> "HE"$_{(ASCII)}$ = $4845_{(HEX)}$
0x7F	0x45		

Electronic Data Sheet (EDS)
- EDS BiSS Interface data

Bank 0x24: EDS BiSS Interface data

Register	Value	Units	Description
0x00	0x01		EDS version (continuous number)
0x01	0x02	Banks	EDS length (bank count completely)
0x02	0x26		Bank address USER start (bank selection in address 0x40, 255= not available)
0x03	0x3F		Bank address USER end (bank selection address 0x40)
0x04	0x64	ns	Minimum permitted clock period on MA (TMA)
0x05	0x00	ns	Minimum BiSS timeout (0= adaptive) (BiSS time = reg(value)*250ns)
0x06	0x00	ns	Maximum BiSS timeout (0= adaptive) (BiSS time = reg(value)*250ns)
0x07	0x00	ns	Minimum BiSS timeout_S (0= adaptive) (BiSS time = reg(value)*25ns)
0x08	0x00	ns	Maximum BiSS timeout_S (0= adaptive) (BiSS time = reg(value)*25ns)
0x09	0x00		Minimum sampling period adaptive timeout (0= adaptive timeout not available)
0x0A	0x00		Maximum sampling period adaptive timeout (0= adaptive timeout not available)
0x0B	0x00		Minimum cycle time (0= no limitation)
0x0C	0x01	ns	Maximum processing time SCD (1= 250ns)
0x0D	0x00	TMA	Additional processing time SCD in clocks
0x0E...0x0F	0x00C8	ms	Maximum "power on delay" until control communication is available
0x10	0x01		Number of data channel in this device (number of words)
0x11	0x01		Area of validity for this EDS (number of slave addresses)
0x12	0x00		Memory location for this EDS (slave ID within this device)
0x13	0x00		Reserved
0x14	0x25		Bank address for content description data channel 1 (profile EDS)
0x15	0xXX	bit	Data length data channel 1 (MT+ST+EW+LC+CRC)
0x16	0x02	bit	Data format data channel 1
0x17	0x43		CRC polynomial (8:1) for data channel 1
0x18	0x00		Bank address for content description data channel 2 (profile EDS)
0x19	0x00	bit	Data length data channel 2
0x1A	0x00	bit	Data format data channel 2
0x1B	0x00		CRC polynomial (8:1) for data channel 2
0x1C	0x00		Bank address for content description data channel 3 (profile EDS)
0x1D	0x00		Data length data channel 3
0x1E	0x00		Data format data channel 3
0x1F	0x00		CRC polynomial (8:1) for data channel 3
0x20...0x3E	0x00		Not used
0x3F	0xXX		Check sum (addition of all bytes within this bank)

Specifications subject to change without notice.

© Hengstler GmbH Uhlandstr. 49 D-78554 Aldingen/ Germany
☎+49 74 24 -89 0 Fax +49 74 24 - 89 500
E-Mail: info@hengstler.com Internet: www.hengstler.com

Absolute Multiturn Safety Motor Feedback Encoder AM34
Standard Performance for Servo Motor and Drive

Bank 0x25: EDS Encoder data

Register	Value	Units	Description	Meaning
0x00	0x01		BiSS Profile 3 Version	1
0x01	0x01	Bank	Length of this profile	1
0x02...0x03	0x62XX		Profile identification BP3 (content also available in address 0x42 and 0x43)	XX
0x04	0x01		Feedback bit 1 low active error status nE	ERR bit low active
0x05	0x02		Feedback bit 2 low active warning status nW	WRN bit low active
0x06	0xC8	ms	Maximum "power on delay" until position data available	200
0x07	0x00		Reserved	0
0x08	0x00		Encoder type	Rotary encoder
0x09	0x00		Position value	Not defined
0x0A	0x00	bit	Data length MULTITURN	0
	0x0C			12
0x0B	0x01		Data format MULTITURN	Left aligned
0x0C	0x08	bit	Data length COARSE	8
0x0D	0x01		Data format COARSE	Left aligned
0x0E	0xXX	bit	Data length FINE	XX
0x0F	0x01		Data format FINE	Left aligned
0x10...0x13	0x00001000		Number of distinguishable revolutions/periods	4096
0x14...0x17	0x00000200	PPR	Number of signal periods per revolution/ length of signal period	512
0x18...0x1B	0x00000000		Resolution factor per signal period (LSB of the interpo-lation)	Not defined
0x1C...0x1F	0x00000043		CRC polynomial (32:1) 2)	67
0x20...0x23	0x00000000		CRC start value3)	0
0x24...0x25	0x0078	arc-sec	Absolute accuracy	120
0x26...0x27	0x000C	arc-sec	Repeat accuracy	12
0x28...0x29	0x0000	arc-sec	Angular speed/ speed depending accuracy	0
0x2A...0x2B	0x0000	arc-sec	Hysteresis	0
0x2C...0x2D	0x2EE0	rpm	Maximum revolution speed/ maximum speed	12000
0x2E...0x2F	0x03E78	Rad/ sec^2	Maximum angular acceleration/ maximum acceleration = reg(value)*100	100000
0x30...0x31	0x00E9	°C	Minimum operating temperature = $reg(value)-273_{dec}$	-40
0x32...0x33	0x0184	°C	Maximum operating temperature = $reg(value)-273_{dec}$	115
0x34...0x35	0x128E	mV	Minimum operating voltage	4750
0x36...0x37	0x1482	mV	Maximum operating voltage	5250
0x38...0x39	0x00C8	mA	Maximum current consumption	200
0x3A	0x02/0x03		Safety Integrity Level	SIL 2/ SIL 3
0x3B	0x02/0x03		Performance Level	PLd/PLe
0x3C...0x3E	0x00		Reserved	0
0x3F	0xXX		Checksum (sum of bytes in 0x00 . . . 0x3E)	XX

ENCODER ADJUSTMENT
- Analog signals
- Digital signals
- Eccentricity
- Preset (setting zero position)

Note on BiSS-C:
Please refer to document D-582-037 for details on setting the encoder calibration and configuration during initial commissioning.

Documents for BiSS-C and the EDS can be found on the following website:
https://biss-interface.com/c/downloads

Absolute Multiturn Safety Motor Feedback Encoder AM34
Standard Performance for Servo Motor and Drive

TECHNICAL DATA
electrical interface Sin/Cos

Analog output signals SIN/COS

Output signal	Description
A+	Sine+ (SIN+)
A-	Sine- (SIN-)
GND	Signal grounds (analog/digital) internally connected
B+	Cosine (COS+)
B-	Cosine- (COS-)

Characteristics analogue output signals SIN/COS

Symbol	Parameter	Value	Tolerance	Unit
P_n	Sine/Cosine periods per turn (360°m)	512		PPR
$f()_{sin/cos}$	Frequency Analog	105		kHz
Vout()dc	Output Signal DC Level (typ. 2.5V DC)	50	±3	%VDD
Vout()ac	Output Signal AC Amplitude	250		mV
I()mx	Permissible Load Current	15	±5	mA
PH	Phase sine/cosine	90	±3	°e

Signal output at clockwise rotation when looking at the encoder shaft

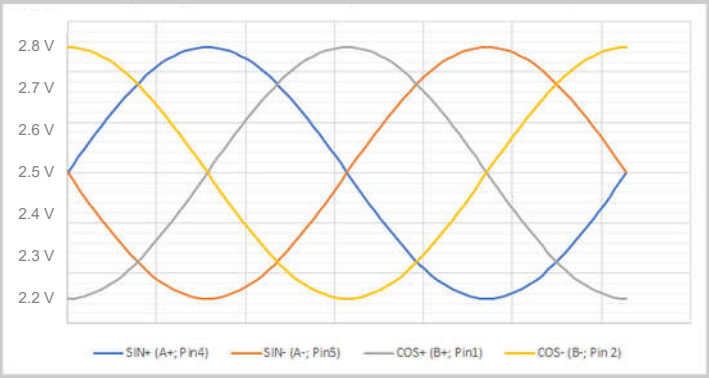

Recommended input circuit with incremental track - Sine/Cosine signals (1 Vpp)

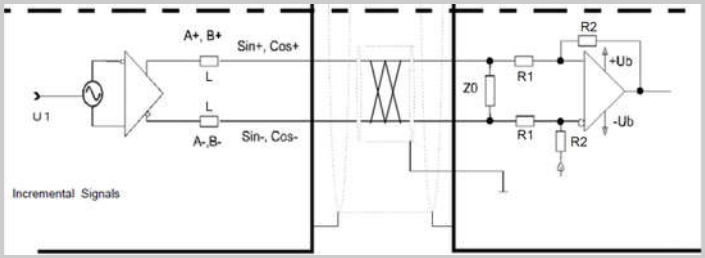

Dimensions:
L = 4.7µH , R1 = 10kΩ ,R1 = R2, Z0 = 120 Ω
U1 = 2.5 V ± 0.5V (relating to supply voltage).

Twisted pair wiring with ground shield on both sides recommended.

TECHNICAL DATA

Absolute Multiturn Safety Motor Feedback Encoder AM34
Standard Performance for Servo Motor and Drive

TECHNICAL DATA
electrical interface AB

Incremental output signals AB	
Output signal	**Description**
A+	A+ (TTL)
A-	A- (TTL)
GND	Signal grounds (analog/digital) internally connected
B+	B+ (TTL)
B-	B- (TTL)

Characteristics output signals

Characteristics incremental output signals AB				
Symbol	**Parameter**	**Value**	**Tolerance**	**Unit**
P_n	AB periods per turn (360°m)	512		#
$f()_{AB}$	Frequency incremental	105		kHz
Vout()hi	Output Signal Amplitude high	≥ 2.5		V
Vout()lo	Output Signal Amplitude low	≤ 0.5		V
I()mx	Permissible Load Current	15	±5	mA
PH	Phase A/B	90	±10	°e
DC	Duty Cycle	50	±10	%

AB signals for different mechanical and electrical directions of movement

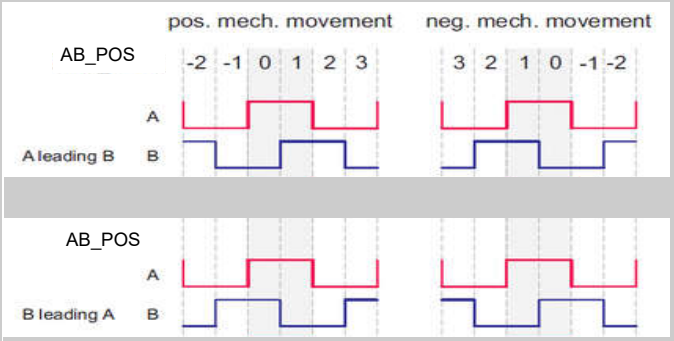

Recommended input circuit with incremental track - A/B signals

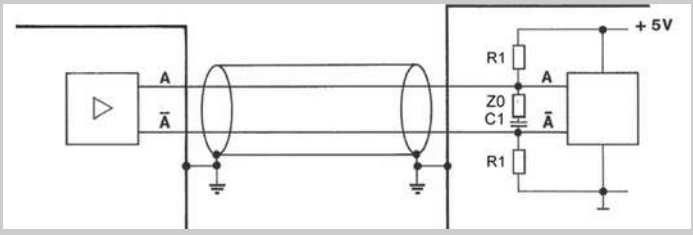

Dimensions:
R1 = 10kΩ ,C1 = 10nF, Z0 = 120 Ω
Twisted pair wiring with ground shield on both sides recommended.

Specifications subject to change without notice.