GENERAL TOLERANCE : ± 0.3 (.011)

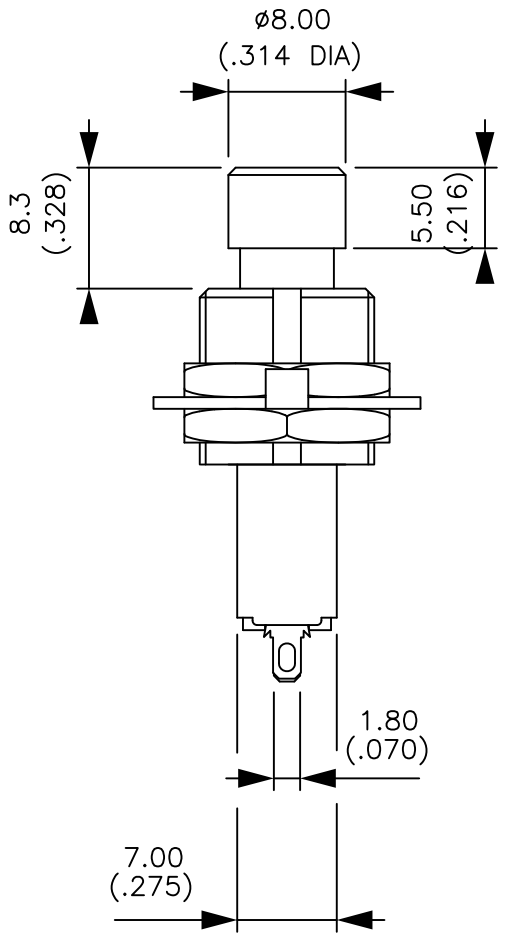

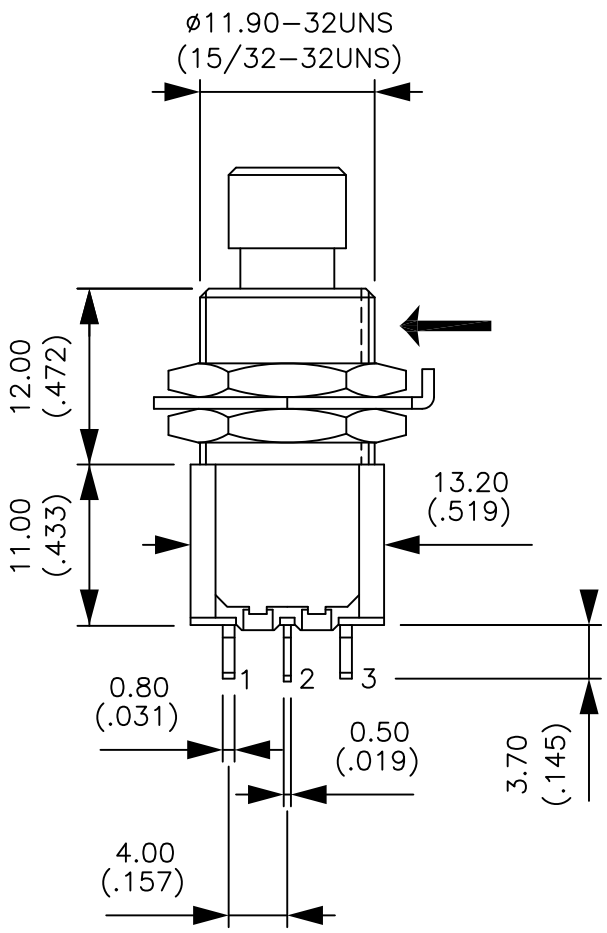

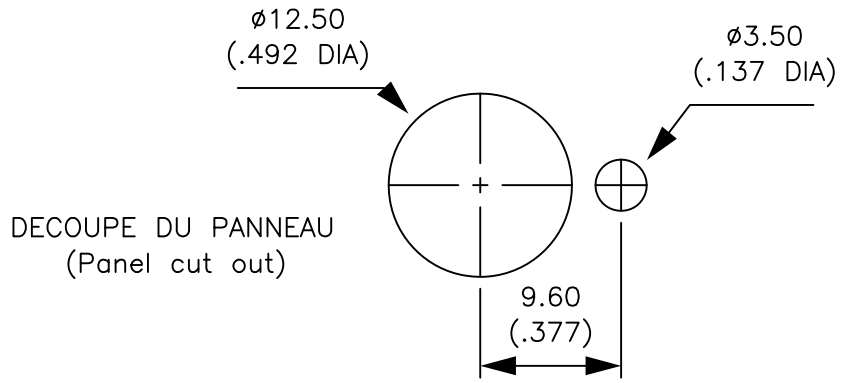

DECOUPE DU PANNEAU
(Panel cut out)

RAINURE
(KEYWAY)

Issue	Modifications	Date	Name
B	Cote de 8.25 passe à 8.30	28/07 2017	MAURI
A	nouveau cartouche + code base	15/05 2014	MD

MATERIAL:

TREATMENT:

FINISH:

Scale: 2

APEM
55,av E.HERRIOT BP 1 82303 CAUSSADE CEDEX
Tél.05.63.93.14.98 – Télécopie.05.63.93.19.03

DRAWN: F. RICARD
DATE : 09/06/2003
CHECKED: C. MORA
Reference D08076
Series 8000

PUSHBUTTON SWITCH
8632A–5 X933

This document is the property of APEM and may not be copied or used for any purpose without written authority. Dimensions and data shown in this specification are subject to change without notice.