Enclosure series mobilCASE

Type: Accumulator holder AH4

Material-No.: 584.004.000

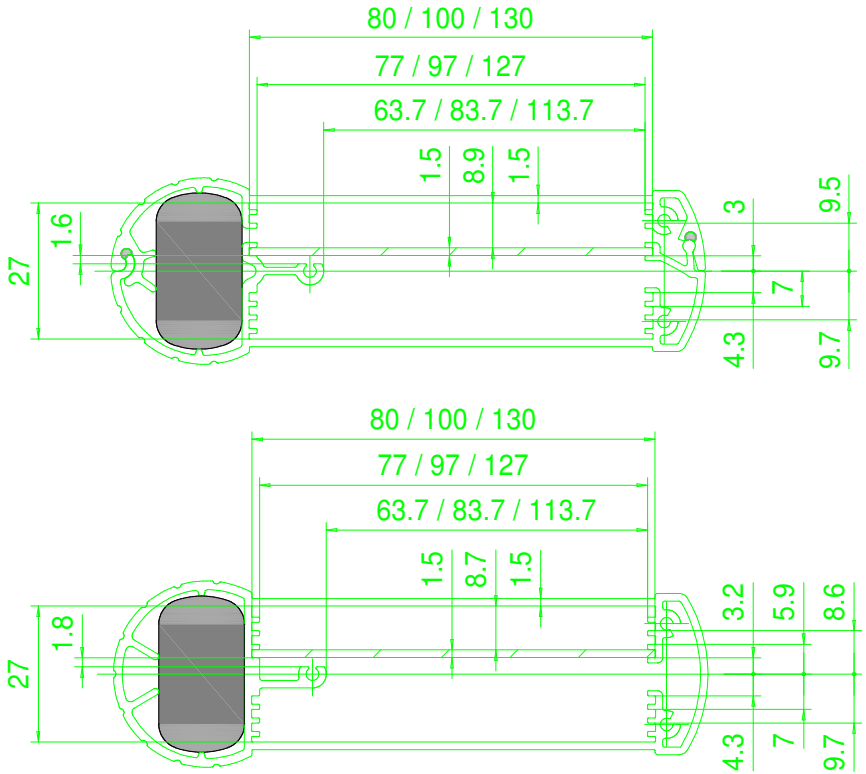

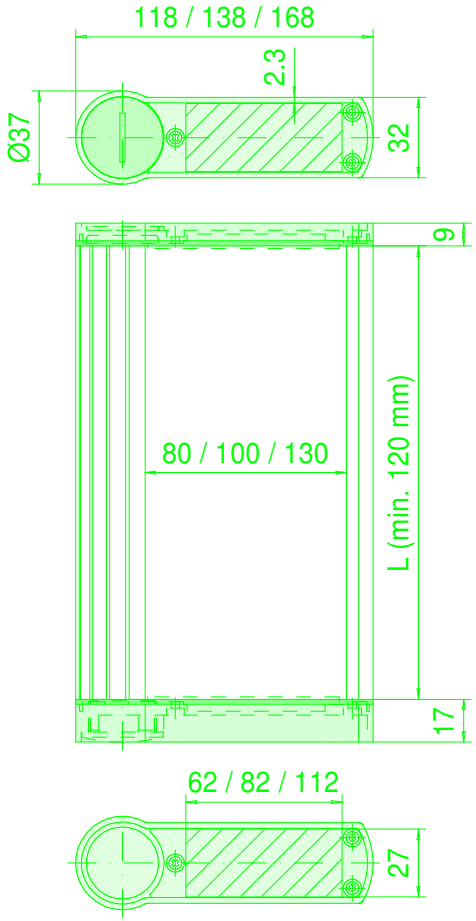

Enclosure material	Al Mg Si 0.5 (DIN 17615)		Gasket lid	2x TPE moulded gasket, siliconefree, black
Lid material	GD-Zn Al 4 Cu 1 (DIN EN 12844)		Ingress protection	IP65/ IP54 EN 60529
Accu holder material	PP HB		Weight	0,010 kg
Battery pcs.	4x mignon cell R6 DIN 40863		Coating profile	Powder coating silver metallic
Lid screws	6x stainless steel 1.4567 (V2A), captive		Coating lid	Powder coating RAL 9005, black
Gasket profile	2-pt.: 2x Chloroprene (CR), light grey; 1-pt.: without gasket		Tolerance	GTA 13/5 DIN 1688-4 (outside dimensions ±0,5mm)