HF14FF MINIATURE HIGH POWER RELAY

c UL us
File No.:E134517

File No.:R50140759

CQC
File No.:CQC10002046169



Features

- 10A switching capability
- 5kV dielectric strength (between coil and contacts)
- Sockets available
- Plastic sealed and flux proofed types available
- UL insulation system: Class F available
- Environmental friendly product (RoHS compliant)
- Outline Dimensions: (29.0 x 13.0 x 26.0) mm

CONTACT DATA

Contact arrangement	1A, 1C
Contact resistance	50mΩ max.(at 1A 24VDC)
Contact material	$AgSnO_2$, AgNi, AgCdO
Contact rating	Resistive: 10A 277VAC/30VDC TV-5 120VAC
Max. switching voltage	277VAC / 30VDC
Max. switching current	10A
Max. switching power	2770VA / 300W
Mechanical endurance	1 x 10^7OPS
Electrical endurance	1 x 10^5OPS (10A 277VAC, Resistive load, Room temp., 1s on 9s off) 1 x 10^5OPS (10A 30VDC, Resistive load, Room temp., 1s on 9s off)

Notes: For plastic sealed type, the venting-hole should be excised in electrical endurance test.

CHARACTERISTICS

Insulation resistance		1000MΩ (at 500VDC)
Dielectric strength	Between coil & contacts	5000VAC 1min
	Between open contacts	1000VAC 1min
Operate time (at nomi. volt.)		15ms max.
Release time (at nomi. volt.)		5ms max.
Vibration resistance		10Hz to 55Hz 1.5mm DA
Shock resistance	Functional	98m/s²
	Destructive	980m/s²
Humidity		5% to 85% RH
Ambient temperature		-40°C to 70°C
Termination		PCB
Unit weight		Approx. 18g
Construction		Plastic sealed, Flux proofed

Notes: 1) The data shown above are initial values.
2) Please find coil temperature curve in the characteristic curves below.
3) UL insulation system: Class F, Class B.

COIL

Coil power	Approx. 530mW

COIL DATA at 23°C

Nominal Voltage VDC	Pick-up Voltage VDC max.	Drop-out Voltage VDC min.	Max. Voltage VDC*	Coil Resistance Ω
3	2.25	0.3	4.2	17 x (1±10%)
5	3.75	0.5	7.0	47 x (1±10%)
6	4.50	0.6	8.4	68 x (1±10%)
9	6.75	0.9	12.6	160 x (1±10%)
12	9.00	1.2	16.8	275 x (1±10%)
18	13.5	1.8	25.2	620 x (1±10%)
24	18.0	2.4	33.6	1100 x (1±10%)
48	36.0	4.8	67.2	4170 x (1±10%)
60	45.0	6.0	84.0	7000 x (1±10%)

Notes: 1) When requiring pick-up voltage < 75% of nominal voltage,special order allowed.
2) * Maximum voltage refers to the maximum voltage which relay coil could endure in a short period of time.
3) Under ambient temperature, applying more than 80% of rating voltage to coil, relay will take action accordingly. But in order to meet the stated product performance, please apply rated voltage to coli.

SAFETY APPROVAL RATINGS

UL/CUL	AgCdO	1 Form A	TV-5 120VAC 10A 277VAC General purpose 10A 30VDC Resistive 1/3HP 250VAC 1/4HP 125VAC
		1 Form C	TV-5 120VAC 10A 277VAC General purpose 10A 30VDC Resistive 1/3HP 250VAC NO:1/4HP 125VAC
	$AgSnO_2$ AgNi		10A 277VAC General purpose 10A 30VDC Resistive 1/3HP 250VAC 1/4HP 125VAC TV-5 120VAC
TÜV	AgCdO $AgSnO_2$		10A 250VAC 10A 30VDC

Notes: 1) All values unspecified are at room temperature.
2) Only typical loads are listed above. Other load specifications can be available upon request.

ORDERING INFORMATION

	HF14FF /	012	-1H	S	T	F	(XXX)
Type							
Coil voltage	3, 5, 6, 9, 12, 18, 24, 48, 60VDC						
Contact arrangement	**1H:** 1 Form A **1Z:** 1 Form C						
Construction 1)	**S:** Plastic sealed(No smoky-gray cover) **Nil:** Flux proofed						
Contact material	**T:** $AgSnO_2$ **3:** AgNi **Nil:** AgCdO						
Insulation standard	**F:** Class F **Nil:** Class B						
Special code4)	**XXX:** Customer special requirement **Nil:** Standard						

Notes: 1) We recommend flux proofed types for a clean environment (free from contaminations like H_2S, SO_2, NO_2, dust, etc.).
We suggest to choose plastic sealed types and validate it in real application for an unclean environment (with contaminations like H_2S, SO_2, NO_2, dust, etc).
2) Contact is recommended for suitable condition and specifications if water cleaning or surface process is involved in assembling relays on PCB.
3) The standard type is made of black cover. If smoke cover is required, please add a special suffix (611) when ordering. Please take note that smoke cover is only availabe for flux proofed type.
4) The customer special requirement express as special code after evaluating by Hongfa.

OUTLINE DIMENSIONS, WIRING DIAGRAM AND PC BOARD LAYOUT

Unit: mm

1 Form A

1 Form C

Outline Dimensions

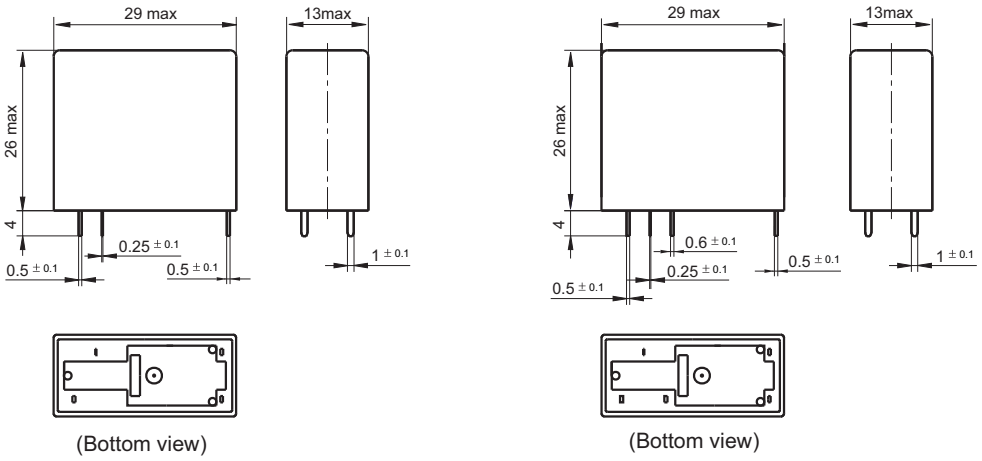

Wiring Diagram
(Bottom view)



PCB Layout
(Bottom view)



Remark: 1) In case of no tolerance shown in outline dimension: outline dimension ≤1mm, tolerance should be ±0.2mm; outline dimension >1mm and ≤5mm, tolerance should be ±0.3mm; outline dimension >5mm, tolerance should be ±0.4mm.
2) The tolerance without indicating for PCB layout is always ±0.1mm.
3) The width of the gridding is 2.5mm.

CHARACTERISTIC CURVES

ENDURANCE CURVE

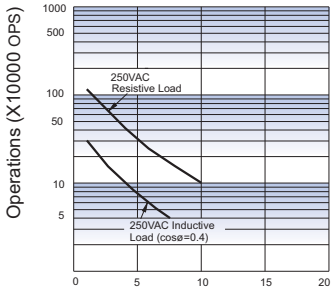

Test conditions:

No contact, Resistive load,

Flux proofed, Room temp., 1s on 9s off.

COIL TEMPERATURE RISE

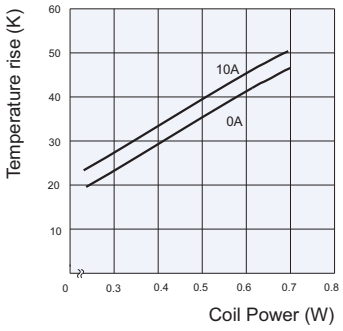

Disclaimer

The specification is for reference only. See to "Terminology and Guidelines" for more information. Specifications subject to change without notice. We could not evaluate all the performance and all the parameters for every possible application. Thus the user should be in a right position to choose the suitable product for their own application. If there is any query, please contact Hongfa for the technical service. However, it is the user's responsibility to determine which product should be used only.

© Xiamen Hongfa Electroacoustic Co., Ltd. All rights of Hongfa are reserved.