Product Data Sheet

9244014942
VVY0108XQHCS
4656 EZ

ebmpapst
The engineer's choice



GREEN TECH

4656 EZ

INDEX

1 General 3
2 Mechanics 3
2.1 General 3
2.2 Connections 4
3 Operating Data 5
3.1 Electrical Operating Data 5
3.2 Electrical Features 6
3.3 Aerodynamics 7
3.4 Sound Data 9
4 Environment 9
4.1 General 9
4.2 Climatic Requirements 10
5 Safety 10
5.1 Electrical Safety 10
5.2 Approval Tests 10
6 Reliability 10
6.1 General 11

1 General

Fan type	Fan without chassis
Rotating direction looking at rotor	Clockwise
Airflow direction	Air outlet over flange
Bearing system	Ball bearing
Mounting position - shaft	Any
Balancing grade	2,5

2 Mechanics

2.1 General

Width	0,0 mm	
Height	0,0 mm	
Depth	39,0 mm	
Diameter	108,0 mm	
Mass	0,380 kg	
Housing material		
Impeller material	Metal	

2.2 Connections

Electrical connection	Wires	
Lead wire length Tolerance	L = 375,0 mm +- 10,0 mm	
Tube length Tolerance	See drawing	
Wire size (AWG)	20	
Insulation diameter	1,3 mm	
Plug	See drawing	
Contact	See drawing	





	Color	Operation
1	black	L
2	black	N

3 Operating Data

3.1 Electrical Operating Data

For checking purposes the electrical data can be specified without an intake nozzle / aperture plate as well. For this the data have to defined by the appropriate quality assurance.

3.2 Electrical Features

Locked rotor protection	Impedance
Locked rotor current at	

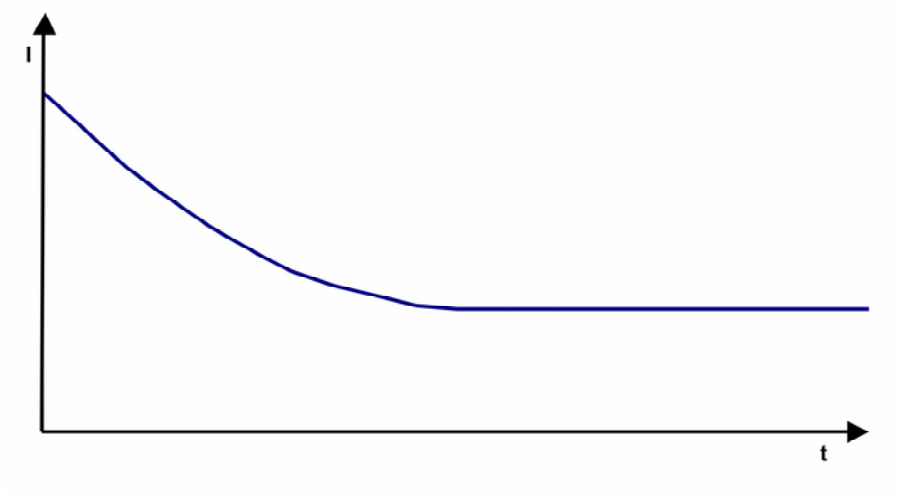

3.3 Aerodynamics

Measurement conditions:

Measured with a double chamber intake rig acc. to DIN EN ISO 5801.
Normal air density = 1,2 kg/m3; Temperature 23℃ +/ - 3℃;
In the intake and outlet area should not be any solid obstruction within 0,5 m. Motor shaft horizontal.
The information is only valid under the specified test conditions and may be changed by the installation conditions. If there are deviations from the standard test conditions, the characteristic values must be checked under the installed conditions.

Measurement setup:	Measured with an aperture plate
Aperture plate diameter:	109 mm
Distance between mounting traverse and aperture plate:	20,5 mm

a.) Operation condition:
2.600 1/min at free air flow Frequency: 50 Hz

Max. free-air flow (Δp = 0 / $\dot{V}$ = max.)	124,0 m3/h
Max. static pressure (Δp = max. / $\dot{V}$ =0)	72 Pa

b.) Operation condition:
2.950 1/min at free air flow Frequency: 60 Hz

Max. free-air flow (Δp = 0 / $\dot{V}$ = max.)	142,0 m3/h
Max. static pressure (Δp = max. / $\dot{V}$ =0)	77 Pa

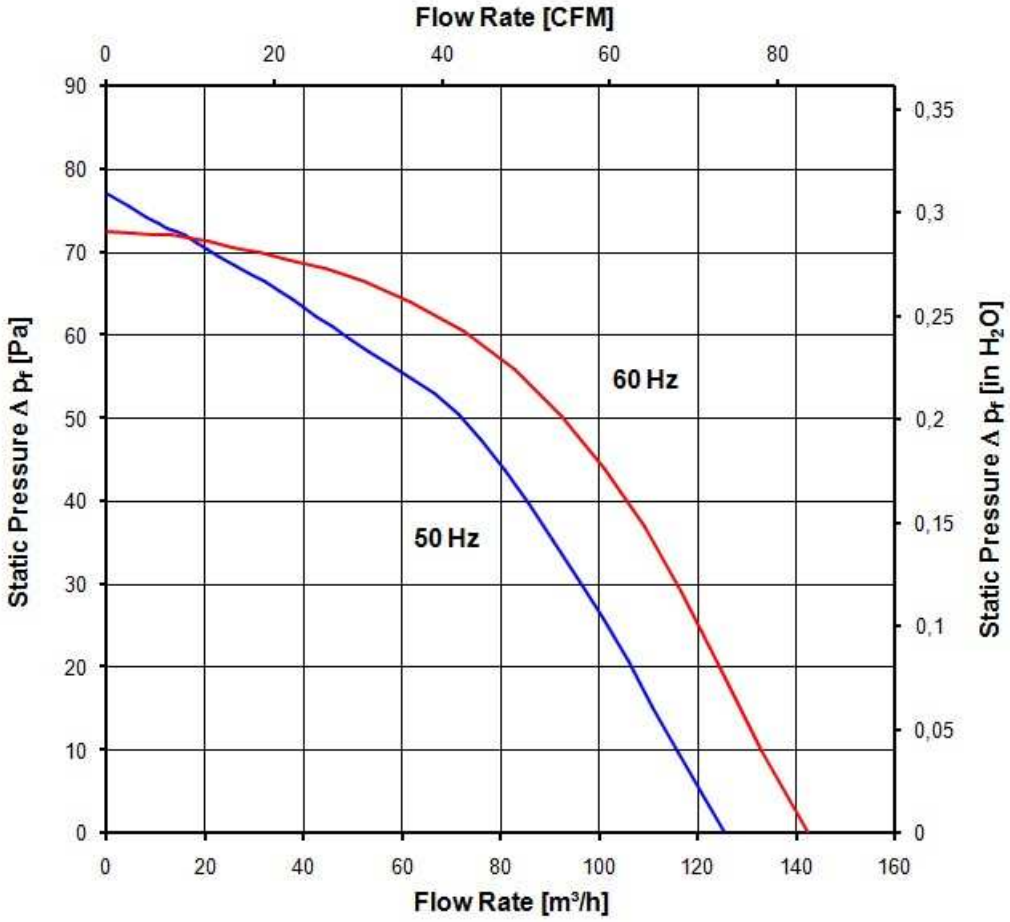
Flow Rate [CFM]
0
20
40
60
80
90
80
70
60
50
40
30
20
10
0
0,35
0,3
0,25
0,2
0,15
0,1
0,05
0
60 Hz
50 Hz
Static Pressure Δ pf [Pa]
Static Pressure Δ pf [in H2O]
0
20
40
60
80
100
120
140
160
Flow Rate [m³/h]

3.4 Sound Data

Measurement conditions:	Sound pressure level: 1 meter distance between microphone and the air intake. Sound power level: Acc. to DIN 45635 part 38 (ISO 10302)Sound power level: Acc. to DIN 45635 part 38 (ISO 10302) Measured in a semianchoic chamber with a background noise level of Lp(A) < 5 dB(A) For further measurement conditions see chapter aerodynamics.

a.) Operation condition:
2.600 1/min at free air flow Frequency: 50 Hz

Optimal operating point		
Sound power level at the optimal operating point		
Sound pressure level at free air flow, measured in rubber bands	39,0 dB(A)	

b.) Operation condition:
2.950 1/min at free air flow Frequency: 60 Hz

Optimal operating point		
Sound power level at the optimal operating point		
Sound pressure level at free air flow, measured in rubber bands	42,0 dB(A)	

4 Environment

4.1 General

Min. permitted ambient temperature TU min.	-40 °C / 50 Hz -40 °C / 60 Hz	
Max. permitted ambient temperature TU max.	65 °C / 50 Hz 70 °C / 60 Hz	
Min. permitted storage temperature TL min.	-40 °C	
Max. permitted storage temperature TL max.	100 °C	

4.2 Climatic Requirements

Humidity requirements	humid heat, constant; according to DIN EN 60068-2-78, 14 days	
Water exposure	None	
Dust requirements	None	
Salt fog requirements	None	

Permitted application area:
The product is intended for use in sheltered rooms with controlled temperature and controlled humidity. Directly exposure to water must be avoided.

Pollution degree 1 (according DIN EN 60664-1)
There is either no pollution or it occurs only dry, non-conductive pollution. The pollution has no negative impact.

5 Safety

5.1 Electrical Safety

Dielectric strength DIN EN 60950 (VDE 0805) and DIN EN 60335 (VDE 0700) A.) Type test Measuring conditions: After 48h of storage at 95% R.H. and 25°C. No arcing or breakdown is allowed! All connections together to ground. B.) Routine test Measuring conditions: At indoor climate. No arcing or breakdown is allowed! All connections together to ground.	1500 VAC / 1 Min. 1500 VAC / 1 Sec.
Isolation resistance Measuring conditions: After 48h of storage at 95% R.H. and 25°C measured with U=500 VDC for 1 min.	RI > 50 MOhm
Clearance / creepage distance	2,0 mm / 1,8 mm
Protection class	I

5.2 Approval Tests

CE	EC Declaration of Conformity	Yes
EAC	Eurasian Conformity	Yes
UL	Underwriters Laboratories	Yes / UL507, Electric Fans E38324
VDE	Association for Electrical, Electronic and Information Technologies	Yes / Approval acc. to EN 60950 (VDE 0805) - Information technology equipment
CSA	Canadian Standards Association	No
CCC	China Compulsory Certification	Yes / GB 12350 Safety Requirements for small Power Motors

The approval tests are observed to:
U approval max.: 230 V / f: 60 Hz @ TU approval max.: 65 °C

6 Reliability

6.1 General

Life expectancy L10 at TU = 40 °C	37.500 h / 50 Hz	
Life expectancy L10 at TU max.	15.000 h / 50 Hz	

Copying of this document, and giving it to others and the use or communication of the contents thereof, are forbidden without express authority. Offenders are liable to the payment of damages. All rights are reserved in the event of the grant of a patent or the registration of a utility model or design.

Schutzvermerk nach DIN 34 beachten

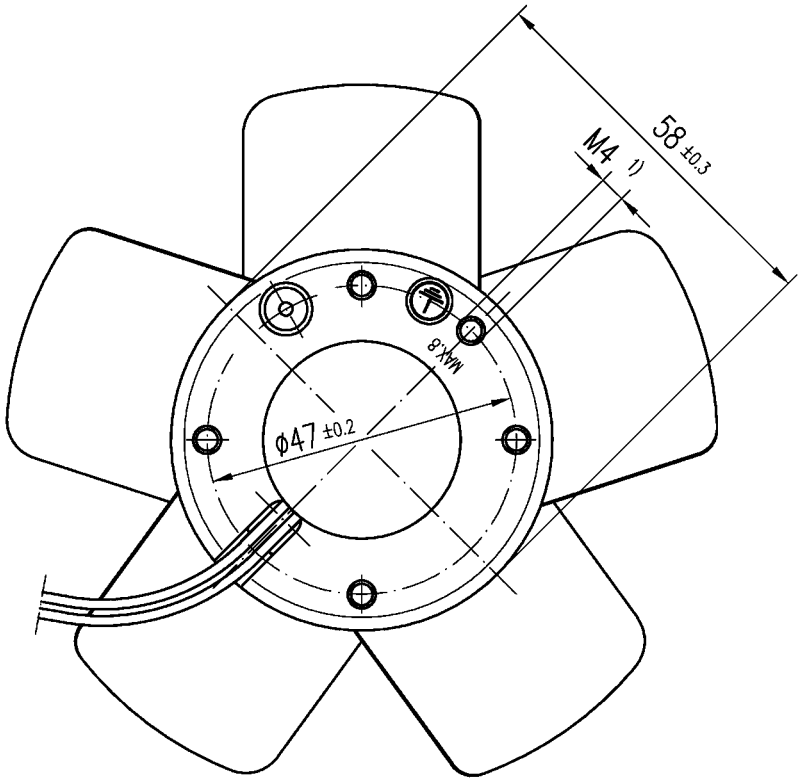

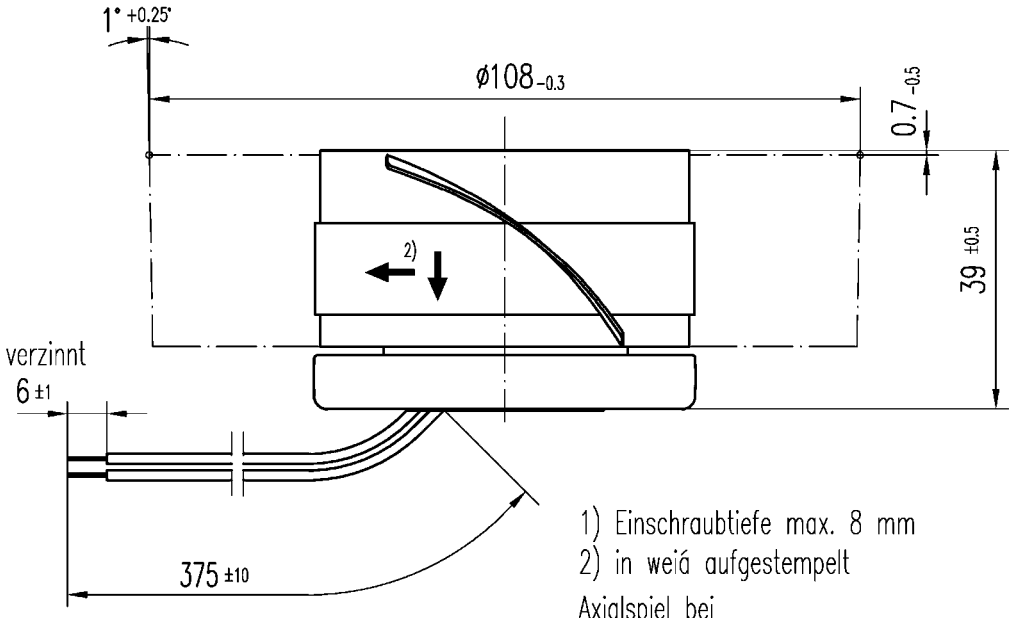

1) Einschraubtiefe max. 8 mm
2) in weiá aufgestempelt

Axialspiel bei
- Kugellagerung (K): 0 (mit Federausgleich)
- Gleitlagerung (G): 0.1 - 0.6

084
210
232
235
240
516

Allgemeintoleranzen

DIN 2768 - mK

gilt f?r: 924 4014 942 (K) 4656 EZ
924 4014 945 (K) 4656 EZR
924 4014 951 (G) 4580 EZ-951
ⓓ 924 4014 007 (K) 4656 EZU

					Datum	Name
				Erstellt		Kieninger
				Gepr?ft		Wrobel G.
a	Erg?nzung	25.03.97	Koletzki M.			
Index	Žnd.-Nr.	Datum	Ge?ndert von			

Zur Verwendung im Verteiler freigegeben von Koletzki M. am

PAPST
PAPST-MOTOREN GmbH & Co KG
D-78112 St.Georgen
Germany

Artikel

Maástab 1:1

Zchg.-Nr.

Blatt

Ers.f.Zchg.:

:\