THERMOMETRICS
A COMMITMENT TO EXCELLENCE

CTS

Coolant Temperature Sensor



The Coolant Temperature Sensor (CTS) monitors the temperature of the coolant that is being pumped around the battery to cool the battery module of EV/PHEVs. If the battery module starts to overheat, the Coolant Temperature Sensor relays a signal to the Battery Management System (BMS). The BMS uses this information to prevent battery packs from any damage and maximize the performance.

Applications

- Battery coolant temperature
- HVAC refrigerant lines
- P/No : WTF083B001

Features

- IP67 rated package
- Compact IP67 design with integrated connector
- Customizable to meet application installation needs
- Variety of RvT curves and terminal plating available
- Operating temperatures to 100°C
- Fast response proven design

Amphenol
Advanced Sensors

CTS Specifications

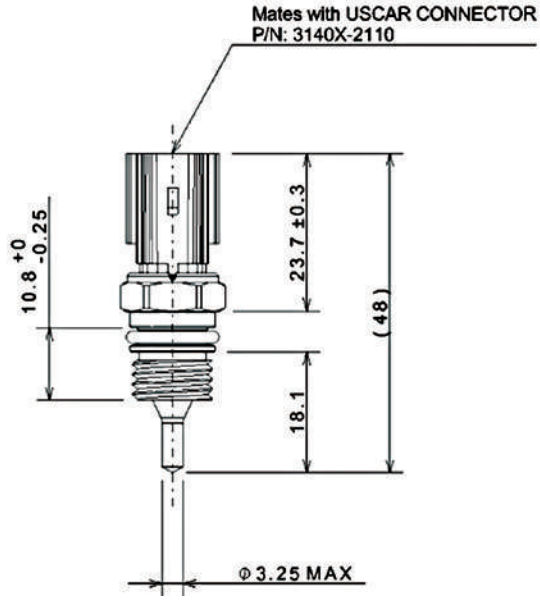

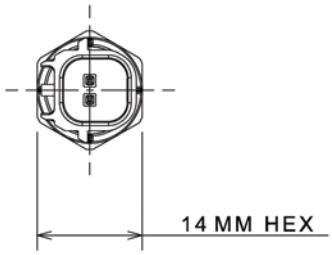

Operating Temperature Range
-40°C to 100°C

Storage Temperature Range
-40°C to 125°C

R @ 110°C
2828Ω ± 1.3%

Response Time
5 seconds from 25°C to 85°C in water

Temperature Accuracy
R@25°C ±0.3°C

Housing Material
PBT-GF15 Connector with 14mm Hex
Machined 12L14 Steel, Zinc with trivalent chromium

Beta (25/85)° C
3975K ±0.75%

Connector
USCAR 064 Sealed (IP67)

Mating Connector
USCAR 3140x-2110

R vs. T

Temp. (°C)	Resistance (Ω)	Resistance Accuracy		Temperature Accuracy	
		-%	+%	+°C	-°C
-40	94331	-3.9	4.0	0.58	-0.61
-35	68175	-3.6	3.7	0.57	-0.59
-30	49796	-3.4	3.5	0.55	-0.57
-25	36743	-3.2	3.3	0.53	-0.55
-20	27377	-3.0	3.0	0.51	-0.52
-15	20590	-2.8	2.8	0.49	-0.50
-10	15626	-2.6	2.6	0.47	-0.48
-5	11960	-2.4	2.4	0.45	-0.46
0	9231	-2.2	2.2	0.43	-0.43
5	7180	-2.0	2.0	0.40	-0.41
10	5628	-1.8	1.8	0.38	-0.38
15	4444	-1.6	1.6	0.35	-0.35
20	3533	-1.5	1.5	0.32	-0.33
25	2828	-1.3	1.3	0.30	-0.30
30	2278	-1.5	1.5	0.34	-0.34
35	1847	-1.6	1.6	0.39	-0.39
40	1506	-1.8	1.8	0.44	-0.44
45	1235	-1.9	1.9	0.49	-0.49
50	1018	-2.1	2.1	0.54	-0.55
55	844	-2.2	2.2	0.59	-0.60
60	703	-2.3	2.4	0.65	-0.66
65	589	-2.5	2.5	0.70	-0.71
70	495	-2.6	2.6	0.76	-0.77
75	418	-2.7	2.8	0.81	-0.83
80	355	-2.8	2.9	0.87	-0.89
85	303	-2.9	3.0	0.93	-0.95
90	259	-3.1	3.1	0.99	-1.02
95	222	-3.2	3.3	1.05	-1.08
100	192	-3.3	3.4	1.12	-1.15

Amphenol
Advanced Sensors

www.amphenol-sensors.com

© 2017 Amphenol Corporation. All Rights Reserved. Specifications are subject to change without notice.
Other company names and product names used in this document are the registered trademarks or trademarks of their respective owners.

AAS-920-695A - 06/2017