Brand of NTN corporation

Technical data

32304A

Single row tapered roller bearings



Tapered roller bearing, pressed steel cage

VISUAL (S)

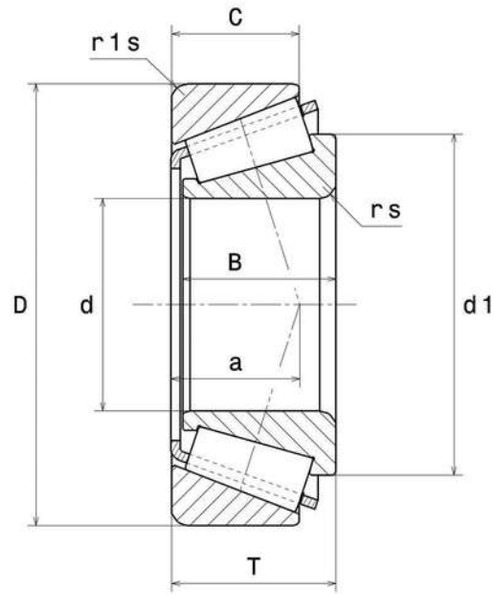

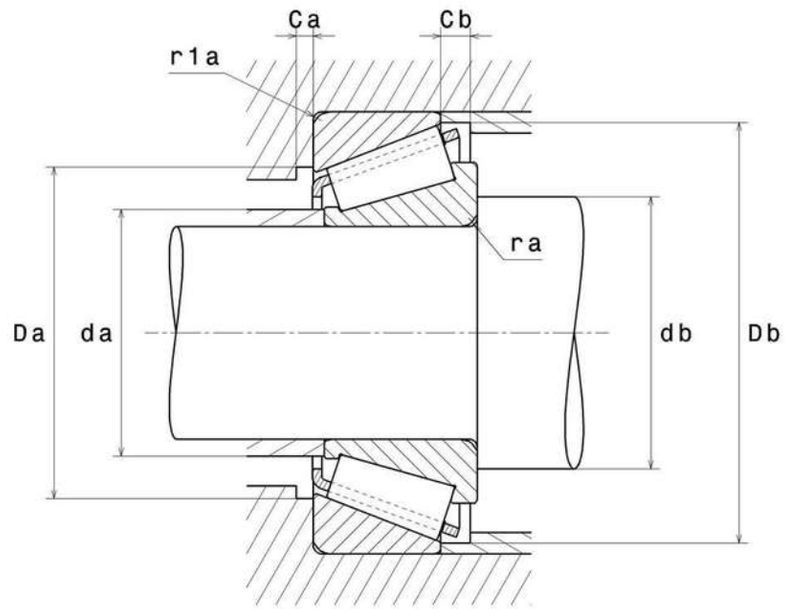

NTN Europe
1 rue des Usines · BP 2017 · 74010 Annecy Cedex · France · Tel. +33 (0)4 50 65 30 00
S.A. au capital de 322 639 919 € · RCS ANNECY B 325 821 072 · Id. Fiscale : FR 48 325 821 072
SIRET 325 821 072 00015 · Code APE 2815 Z · Code NACE 28.15

32304A
Single row tapered roller bearings

PRODUCT DEFINITION	
Brand	SNR
d - Internal diameter	20 mm
D - External diameter	52 mm
B - Bearing/Inner ring width	21 mm
C - Outer ring width	18 mm
T - Total width	22,25 mm
d1 - External diameter inner ring	34,8 mm
a - Charge load application point	13,6 mm
rs - Min fillet radius	1,5 mm
r1s - Min fillet radius	1,5 mm
Mass	0,23 kg
ISO 355 reference	T2FD020

PRODUCT PERFORMANCE	
C - Dynamic load	47 kN
A2 - Rating life coefficient	1
C0 - Static load	46,6 kN
Cu - Fatigue limit load	5,7 kN
e - Coefficient	0.3
Y0 - Static axial load coefficient	1.1
Y2 - Upper axial load coefficient	2
N ref - Reference thermal speed	9300 tr/min
N lim - Mechanical Limit Speed	15000 tr/min
Tmin - Min operating temperature	-40 °C

PRODUCT PERFORMANCE	
Tmax - Max operating temperature	120 °C

BEARING FREQUENCIES	
BPFO - Over rolling frequency on outer ring (60 rpm)	5.123 Hz
BPFI - Over rolling frequency on inner (60 rpm)	7.877 Hz
BSF - Over rolling frequency on rolling element (60 rpm)	4.42 Hz
BRF - Fréquence de rotation : Élément roulant	2.21 Hz
FTF - Rotational frequency - cage (60 rpm)	0.394 Hz

ABUTMENT	
da max - Max shoulder diameter IR	27 mm
db min - Min IR shoulder diameter	28,5 mm
Da min - Min shoulder diameter OR	43 mm
Da max - Max shoulder diameter OR	43,5 mm
Db min - Min OR shoulder diameter	47 mm
Ca - Min clearance	3 mm
Cb - Min clearance	4 mm
ra max - Max fillet radius	1,5 mm
r1a - Max fillet radius	1,5 mm

ESHOPDONOTDISPLAY	
Reference	32304A
Image	TRB_1.jpg, TRB_2.jpg, TRB_3.jpg
KIZEI	Non/No
TOPLINE	Non/No
ULTAGE	Non/No

ESHOPDONOTDISPLAY	
Tracepart	Oui/Yes
- Contact angle	11.31 °

INDUSTRY CALCUL FACTORS

Equivalent dynamic radial load

$P = X.Fr + Y.Fa$

Fa / Fr ≤ e		Fa / Fr > e	
X	Y	X	Y
1	0	0.4	Y2

Equivalent static radial load

$Po = Xo.Fr + Yo.Fa$

X_0	Y_0
0.5	Y0

If Po <Fr, then use Po = Fr

The values for e, Y2 and Y0 are shown in the above table