JUMO GmbH & Co. KG
Delivery address: Mackenrodtstraße 14
36039 Fulda, Germany
Postal address: 36035 Fulda, Germany
Phone: +49 661 6003-0
Fax: +49 661 6003-607
Email: mail@jumo.net
Internet: www.jumo.net

JUMO Instrument Co. Ltd.
JUMO House
Temple Bank, Riverway
Harlow, Essex, CM20 2DY, UK
Phone: +44 1279 63 55 33
Fax: +44 1279 62 50 29
Email: sales@jumo.co.uk
Internet: www.jumo.co.uk

JUMO Process Control, Inc.
6733 Myers Road
East Syracuse, NY 13057, USA
Phone: +1 315 437 5866
Fax: +1 315 437 5860
Email: info.us@jumo.net
Internet: www.jumousa.com

JUMO tecLine CR

Stainless steel and titanium conductive conductivity sensors

Type series 202924 (previous type series 2 EL6...)



Type 202924/10... (Example)

Typical areas of application

- Pure and highly-purified water
- Pharmaceutical industry
- Chemicals
- Food technology
- Chip manufacturing
- Ion exchangers
- Reverse osmosis plants



Type 202924/20... (Example)

Features

- 2-electrodes principle
- For measuring ranges from 0.05 µS/cm to 1 mS/cm
- Sturdy design type
- Wide variety of process connections
- Various insertion lengths
- Pharmaceutical version available
- Made up of physiologically safe, FDA-compliant materials

Brief description

JUMO conductivity sensors are used in conjunction with suitable transducers to define the electrolytic conductivity in liquids. The type series 202924 sensors work according to the 2-electrodes principle. The transducer supplies them with alternating voltage. The current that is carried through the liquid and the electrodes is defined by the medium's conductivity.

Special versions

Pharmaceutically-compliant conductivity sensors with a surface roughness < 0.8 µm are supplied as "pharmaceutical packages" with certificates (ASTM test report, FDA certificate for insulators and O-rings, inspection certificate 3.1). The sensors are packed air tight in foil.

A special conductivity sensor is available for **high temperature applications**. This sensor can be used for medium temperatures of up to 200 °C and a maximum pressure of 17 bar.

Furthermore, we also offer conductivity sensors as **thin versions** that have a shaft diameter of only 16 mm.



Type 202924/30... (Example)

JUMO GmbH & Co. KG
Delivery address: Mackenrodtstraße 14
36039 Fulda, Germany
Postal address: 36035 Fulda, Germany
Phone: +49 661 6003-0
Fax: +49 661 6003-607
Email: mail@jumo.net
Internet: www.jumo.net

JUMO Instrument Co. Ltd.
JUMO House
Temple Bank, Riverway
Harlow, Essex, CM20 2DY, UK
Phone: +44 1279 63 55 33
Fax: +44 1279 62 50 29
Email: sales@jumo.co.uk
Internet: www.jumo.co.uk

JUMO Process Control, Inc.
6733 Myers Road
East Syracuse, NY 13057, USA
Phone: +1 315 437 5866
Fax: +1 315 437 5860
Email: info.us@jumo.net
Internet: www.jumousa.com

Technical data

Type	202924/10...	202924/20...	202924/21...	202924/30...	202924/31...
Cell constants[a]	K = 0.01 cm^{-1} K = 0.1 cm^{-1}				
Typical measuring ranges[b]	0.05 to 20 µS/cm (when K = 0.01) 0.1 µS to 1 mS/cm (when K = 0.1)				
Temperature compensation	With Pt100 or Pt1000, both at least class A				
Process connections	Thread G 1/2 A, Thread G 3/4 A, Thread G 1 A, Thread 1/2"-14 NPT, Thread 3/4"-14 NPT, Taper socket for union nut DN 25 DIN 11851 (dairy pipe fitting), Clamp DN 25	Thread G 1/2 A Clamp DN 25	Clamp DN 25	JUMO PEKA Adapter: Orbital welding socket DN 25-40, VARIVENT® DN 50-150	JUMO PEKA Adapter: Orbital welding socket DN 25-40, VARIVENT® DN 50-150, Clamp DN 25-50, Aseptic DN 40/50, Aseptic NKS DN 40
Body materials	PVDF (default), Stainless steel 1.4571 (optional extra), **High temperature version:** Stainless steel 1.4404 (optional extra)	Stainless steel 1.4435, similar to 316L, version for pharmaceutical industry			
Cell materials	Stainless steel 1.4571 (default), Titanium (optional extra) **High temperature version:** Stainless steel 1.4404 (default)	Stainless steel 1.4435, similar to 316L, version for pharmaceutical industry			
Operating temperature	Up to 135 °C; **High temperature version:** Up to 200 °C	Up to 135 °C		Up to 135 °C (standard operation); Up to 150 °C (sterilization, max. 45 min.)	
Maximum pressure	16 bar at 25 °C or 9 bar at 60 °C; **High temperature version:** 40 bar at 25 °C or 17 bar at 200 °C;	16 bar at 25 °C or 1 bar at 135 °C		9 bar at 25 °C or 5 bar at 150 °C, max. 45 min.	
Electrical connections	Right-angle connector (default) Fixed cable (optional extra) **High temperature version:** Right-angle connector	M12 connector (default) Fixed cable (optional extra) Right-angle connector (optional extra)	M12 connector		

Certificates

ASTM test report	Determination of the exactly measured cell constant according to ASTM D1125-95 and ASTM D5391-99 (one-point calibration)
FDA certificate	The plastics used (insulators and O-rings) are FDA-listed
Optional certificates	Certificate of compliance according to EN 10204 2.1, EN 10204 2.2, EN 10204 3.1 (material, roughness)

[a] The cell constant can differ by ±10 % of the nominal value depending on manufacturing. This deviation can be equalized on the transducer.

[b] The measuring ranges depend on the transducer being used. When used in measuring ranges larger than the "typical" one, incorrect measured values may occur due to polarization.

JUMO GmbH & Co. KG
Delivery address: Mackenrodtstraße 14
36039 Fulda, Germany
Postal address: 36035 Fulda, Germany
Phone: +49 661 6003-0
Fax: +49 661 6003-607
Email: mail@jumo.net
Internet: www.jumo.net

JUMO Instrument Co. Ltd.
JUMO House
Temple Bank, Riverway
Harlow, Essex, CM20 2DY, UK
Phone: +44 1279 63 55 33
Fax: +44 1279 62 50 29
Email: sales@jumo.co.uk
Internet: www.jumo.co.uk

JUMO Process Control, Inc.
6733 Myers Road
East Syracuse, NY 13057, USA
Phone: +1 315 437 5866
Fax: +1 315 437 5860
Email: info.us@jumo.net
Internet: www.jumousa.com

Type 202924/10 dimensions...

Process connections -104, -105 und -106 (G thread)

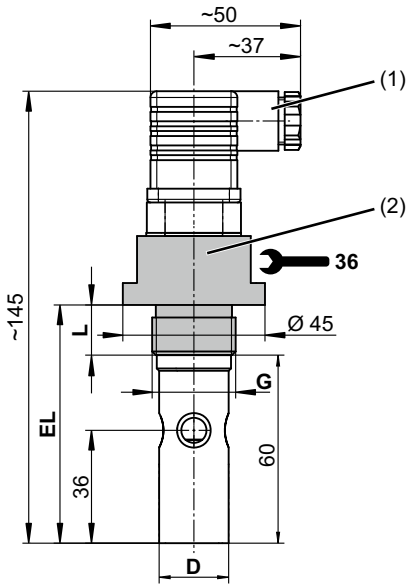

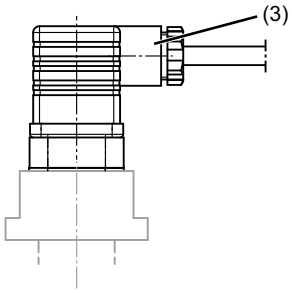

Thread G	L	Shaft Ø D	Insertion length EL
G 1/2 A	14	16	74
G 3/4 A	16	22	76
G 1 A	18	22	78

(1) Right-angle connector (default)
(2) Process connection
(3) Fixed cable (optional extra)

Process connections -144 and -145 (NPT thread)

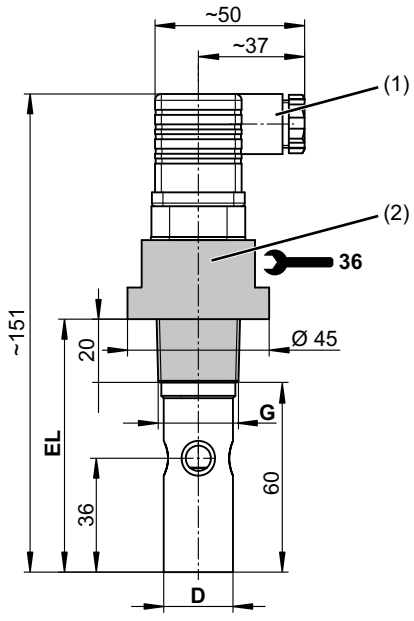

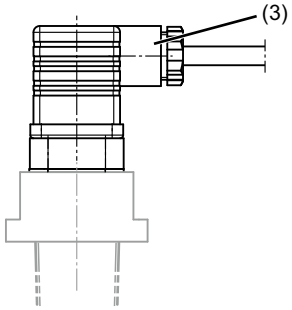

Thread G	Shaft Ø D	Insertion length EL
1/2-14 NPT	16	80
3/4-14 NPT	22	80

(1) Right-angle connector (default)
(2) Process connection
(3) Fixed cable (optional extra)

JUMO GmbH & Co. KG
Delivery address: Mackenrodtstraße 14
36039 Fulda, Germany
Postal address: 36035 Fulda, Germany
Phone: +49 661 6003-0
Fax: +49 661 6003-607
Email: mail@jumo.net
Internet: www.jumo.net

JUMO Instrument Co. Ltd.
JUMO House
Temple Bank, Riverway
Harlow, Essex, CM20 2DY, UK
Phone: +44 1279 63 55 33
Fax: +44 1279 62 50 29
Email: sales@jumo.co.uk
Internet: www.jumo.co.uk

JUMO Process Control, Inc.
6733 Myers Road
East Syracuse, NY 13057, USA
Phone: +1 315 437 5866
Fax: +1 315 437 5860
Email: info.us@jumo.net
Internet: www.jumousa.com

Process connection -604 "dairy pipe fitting" (taper socket with union nut DN 25 DIN 11851)

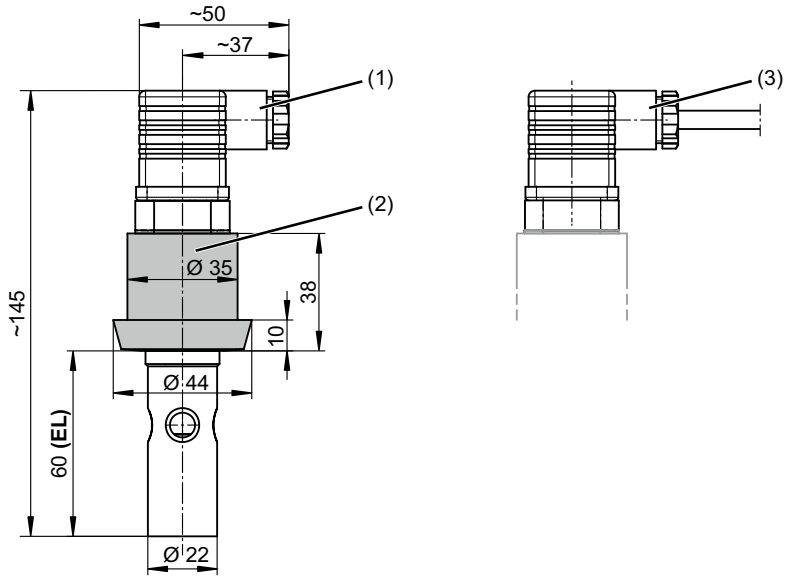

(1) Right-angle connector (default)
(2) Process connection
(3) Fixed cable (optional extra)

Process connection -613 (clamp DN 25)

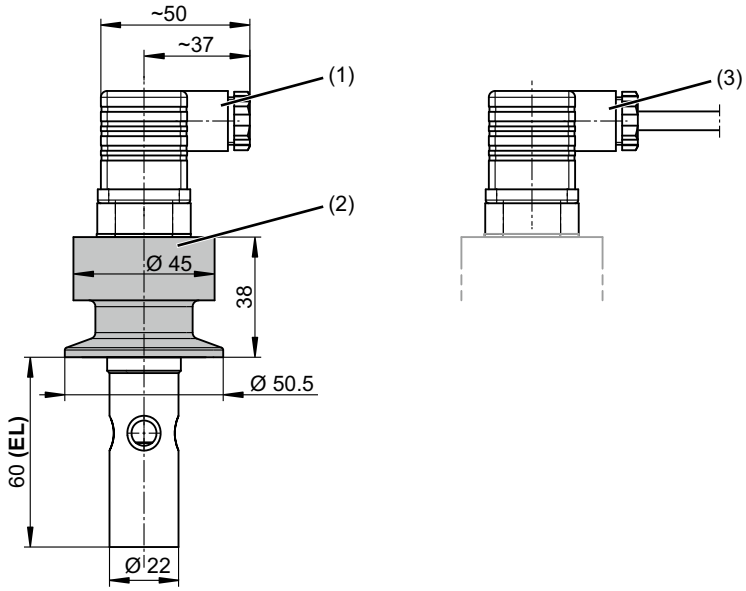

(1) Right-angle connector (default)
(2) Process connection
(3) Fixed cable (optional extra)

JUMO GmbH & Co. KG
Delivery address: Mackenrodtstraße 14
36039 Fulda, Germany
Postal address: 36035 Fulda, Germany
Phone: +49 661 6003-0
Fax: +49 661 6003-607
Email: mail@jumo.net
Internet: www.jumo.net

JUMO Instrument Co. Ltd.
JUMO House
Temple Bank, Riverway
Harlow, Essex, CM20 2DY, UK
Phone: +44 1279 63 55 33
Fax: +44 1279 62 50 29
Email: sales@jumo.co.uk
Internet: www.jumo.co.uk

JUMO Process Control, Inc.
6733 Myers Road
East Syracuse, NY 13057, USA
Phone: +1 315 437 5866
Fax: +1 315 437 5860
Email: info.us@jumo.net
Internet: www.jumousa.com

High temperature version (extra code -765)

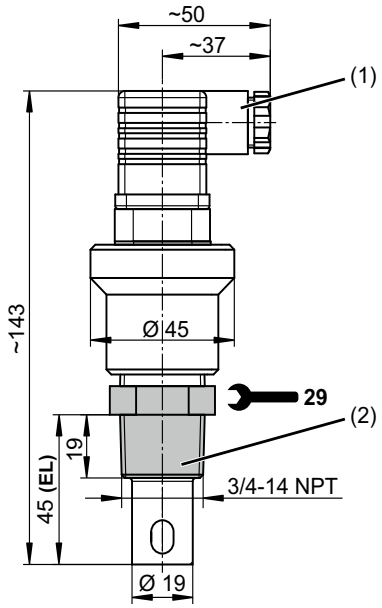

(1) Right-angle connector
(2) Process connection

JUMO GmbH & Co. KG
Delivery address: Mackenrodtstraße 14
36039 Fulda, Germany
Postal address: 36035 Fulda, Germany
Phone: +49 661 6003-0
Fax: +49 661 6003-607
Email: mail@jumo.net
Internet: www.jumo.net

JUMO Instrument Co. Ltd.
JUMO House
Temple Bank, Riverway
Harlow, Essex, CM20 2DY, UK
Phone: +44 1279 63 55 33
Fax: +44 1279 62 50 29
Email: sales@jumo.co.uk
Internet: www.jumo.co.uk

JUMO Process Control, Inc.
6733 Myers Road
East Syracuse, NY 13057, USA
Phone: +1 315 437 5866
Fax: +1 315 437 5860
Email: info.us@jumo.net
Internet: www.jumousa.com

Type 202924/20 dimensions...

Process connection -104 (thread G 1/2 A)

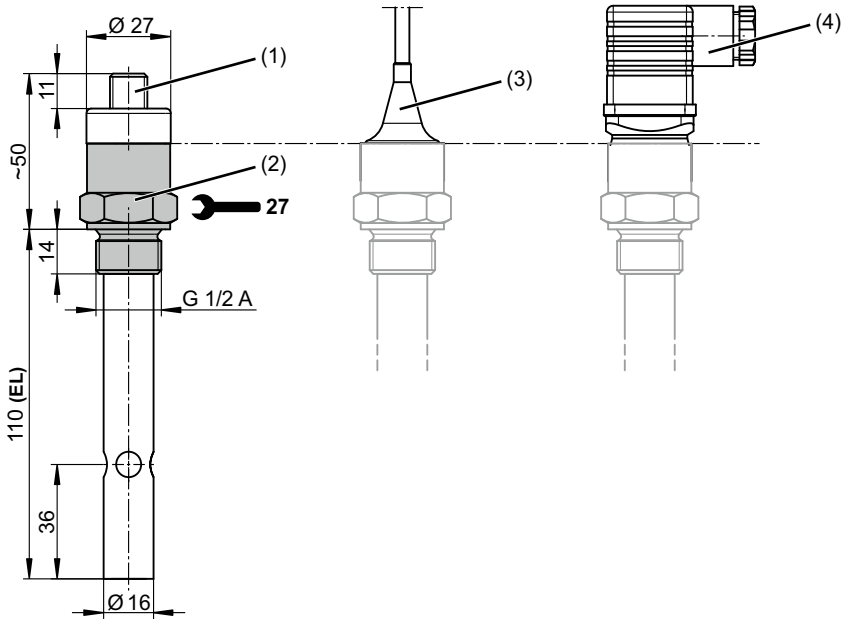

(1) M12 connector (default)
(2) Process connection
(3) Fixed cable (optional extra)
(4) Right-angle connector (optional extra)

Process connection -613 (clamp DN 25)

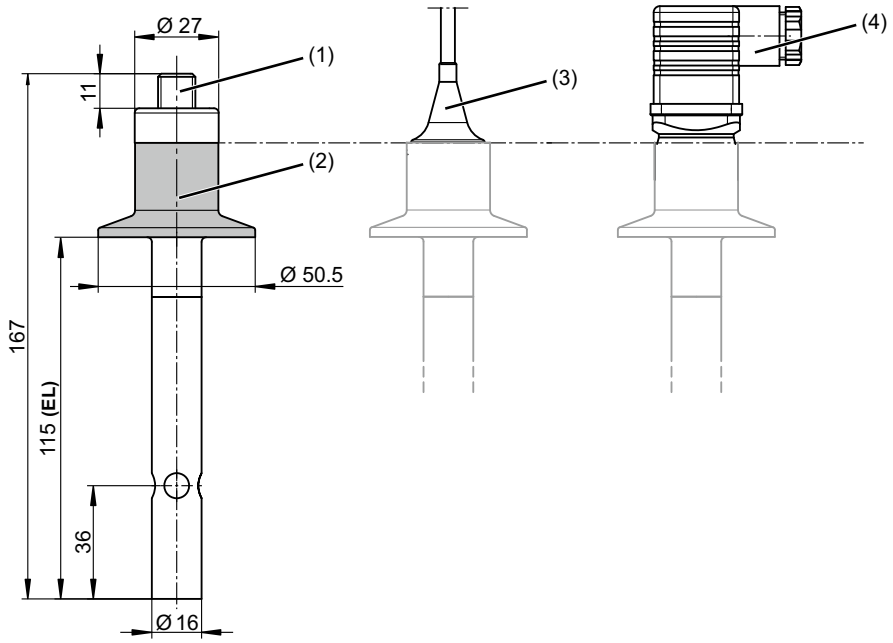

(1) M12 connector (default)
(2) Process connection
(3) Fixed cable (optional extra)
(4) Right-angle connector (optional extra)

JUMO GmbH & Co. KG
Delivery address: Mackenrodtstraße 14
36039 Fulda, Germany
Postal address: 36035 Fulda, Germany
Phone: +49 661 6003-0
Fax: +49 661 6003-607
Email: mail@jumo.net
Internet: www.jumo.net

JUMO Instrument Co. Ltd.
JUMO House
Temple Bank, Riverway
Harlow, Essex, CM20 2DY, UK
Phone: +44 1279 63 55 33
Fax: +44 1279 62 50 29
Email: sales@jumo.co.uk
Internet: www.jumo.co.uk

JUMO Process Control, Inc.
6733 Myers Road
East Syracuse, NY 13057, USA
Phone: +1 315 437 5866
Fax: +1 315 437 5860
Email: info.us@jumo.net
Internet: www.jumousa.com

Type 202924/21 dimensions...

Process connection -613 (clamp DN 25)

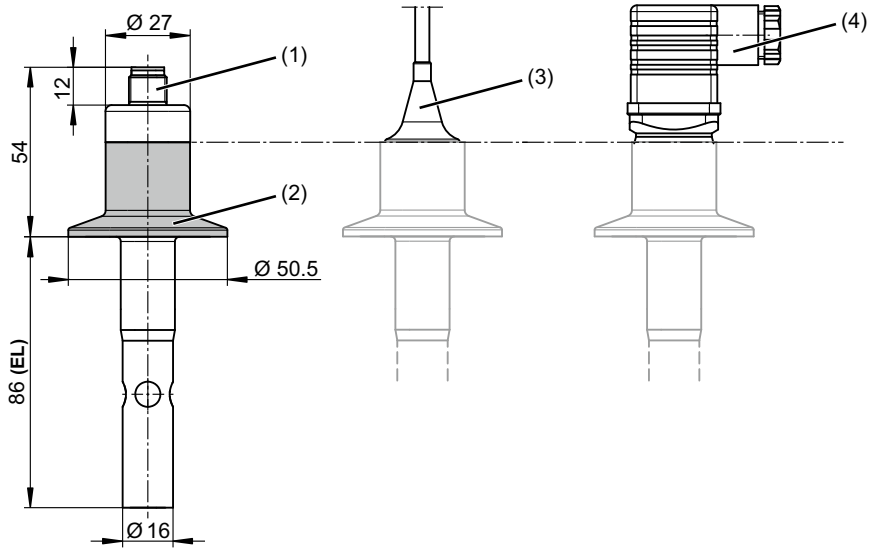

(1) M12 connector (default)
(2) Process connection
(3) Fixed cable (optional extra)
(4) Right-angle connector (optional extra)

Type 202924/20... and /21... installation example

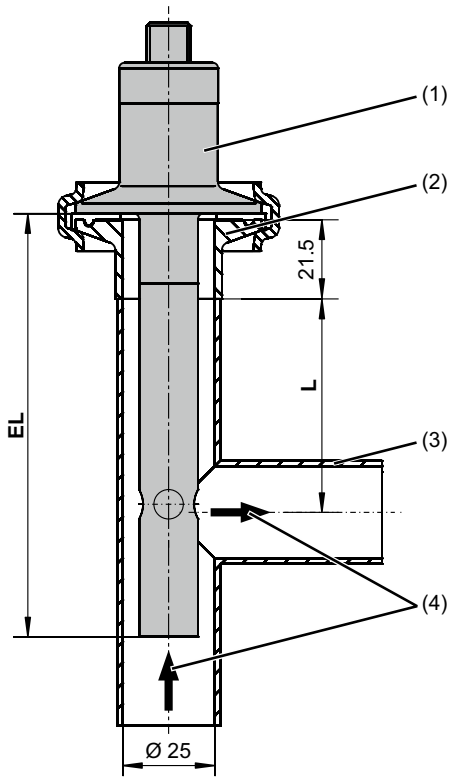

(1) Sensor with process connection clamp DN 25
(2) Clamp socket DIN DN 25, 1", ISO DN 20
(3) T-piece **(not included in the scope of delivery!)**
(4) Flow direction

Recommended T-piece for installing the sensors

Sensor	T-piece	Length L
202924/20... **EL** = 115 mm	DIN 11852, DN 25	50 mm
202924/21... **EL** = 86 mm	Similar DIN 11852, DN 25	27 mm

JUMO GmbH & Co. KG
Delivery address: Mackenrodtstraße 14
36039 Fulda, Germany
Postal address: 36035 Fulda, Germany
Phone: +49 661 6003-0
Fax: +49 661 6003-607
Email: mail@jumo.net
Internet: www.jumo.net

JUMO Instrument Co. Ltd.
JUMO House
Temple Bank, Riverway
Harlow, Essex, CM20 2DY, UK
Phone: +44 1279 63 55 33
Fax: +44 1279 62 50 29
Email: sales@jumo.co.uk
Internet: www.jumo.co.uk

JUMO Process Control, Inc.
6733 Myers Road
East Syracuse, NY 13057, USA
Phone: +1 315 437 5866
Fax: +1 315 437 5860
Email: info.us@jumo.net
Internet: www.jumousa.com

Type 202924/30... and /31... dimensions

Process connection -997 (JUMO PEKA hygienic process connection)

Installation length EL	Total length GL	Sensor type
40	110	202924/30...
70	140	202924/31...

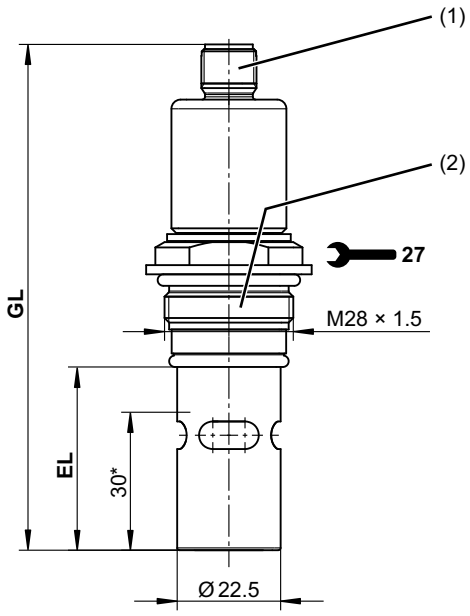

(1) M12 connector
(2) Process connection 997 (PEKA), Stainless steel 1.4435

* Minimum immersion depth

JUMO GmbH & Co. KG
Delivery address: Mackenrodtstraße 14
36039 Fulda, Germany
Postal address: 36035 Fulda, Germany
Phone: +49 661 6003-0
Fax: +49 661 6003-607
Email: mail@jumo.net
Internet: www.jumo.net

JUMO Instrument Co. Ltd.
JUMO House
Temple Bank, Riverway
Harlow, Essex, CM20 2DY, UK
Phone: +44 1279 63 55 33
Fax: +44 1279 62 50 29
Email: sales@jumo.co.uk
Internet: www.jumo.co.uk

JUMO Process Control, Inc.
6733 Myers Road
East Syracuse, NY 13057, USA
Phone: +1 315 437 5866
Fax: +1 315 437 5860
Email: info.us@jumo.net
Internet: www.jumousa.com

Process connection adapter for type 202924/30... and /31...

Varivent DN 40 - 150
Part no.: 00577961

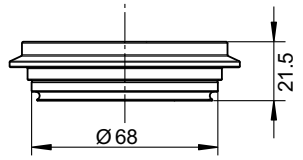

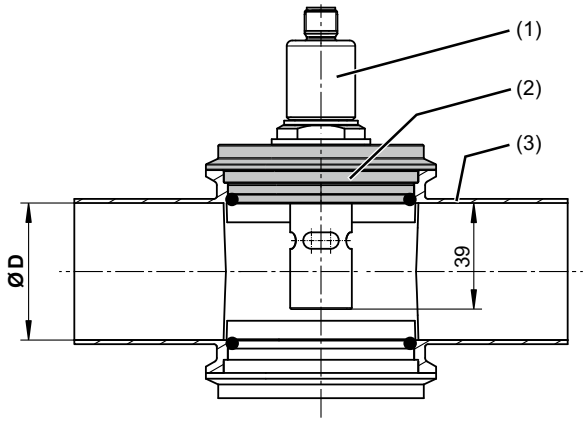

Installation example

VARIVENT® housing DN[a]	Ø D	Sensor type
40	40	--
50	50	202924/30
65	70	202924/30
80	81	202924/30[b] 202924/31
100	100	202924/30[b] 202924/31
125	125	202924/30[b] 202924/31
150	150	202924/30[b] 202924/31

[a] To be provided by the customer.
[b] Preferred sensor type.

O-ring not included in the scope of delivery!

(1) JUMO tecLine CR-PEKA sensor
(2) VARIVENT® DN 40 - 150 process adapter
(3) VARIVENT® housing

Welding socket Ø 55
Part no.: 00447190

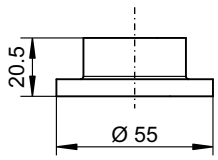

Orbital welding socket DN 25
Part no.: 00530211

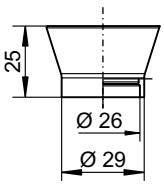

Orbital welding socket DN 32
Part no.: 00530212

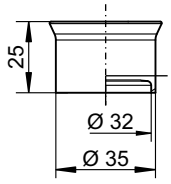

Orbital welding socket DN 40
Part no.: 00531973

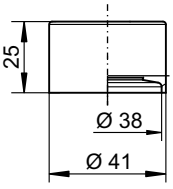

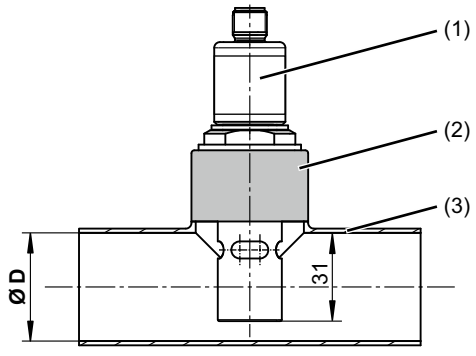

Installation example

Orbital welding socket DN	T-piece DN[a]	Ø D	Sensor type
25/32/40	40-25/32/40	38	202924/30
	50-25/32/40	50	
	65-25/32/40	70	
	80-25/32/40	81	202924/30[b] 202924/31
	100-25/32/40	100	202924/30[b] 202924/31
	125-25/32/40	125	202924/30[b] 202924/31
	150-25/32/40	150	202924/30[b] 202924/31

[a] To be provided by the customer.
[b] Preferred sensor type.

(1) JUMO tecLine CR-PEKA sensor
(2) Welding socket
(3) Short T-piece, similar to DIN 11852

JUMO GmbH & Co. KG
Delivery address: Mackenrodtstraße 14
36039 Fulda, Germany
Postal address: 36035 Fulda, Germany
Phone: +49 661 6003-0
Fax: +49 661 6003-607
Email: mail@jumo.net
Internet: www.jumo.net

JUMO Instrument Co. Ltd.
JUMO House
Temple Bank, Riverway
Harlow, Essex, CM20 2DY, UK
Phone: +44 1279 63 55 33
Fax: +44 1279 62 50 29
Email: sales@jumo.co.uk
Internet: www.jumo.co.uk

JUMO Process Control, Inc.
6733 Myers Road
East Syracuse, NY 13057, USA
Phone: +1 315 437 5866
Fax: +1 315 437 5860
Email: info.us@jumo.net
Internet: www.jumousa.com

Process connection adapter for type 202924/31...

Clamp DN 25/32/40
Part no.: 00577998

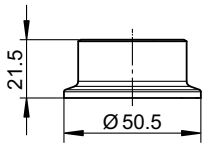

Clamp DN 50
Part no.: 00577997

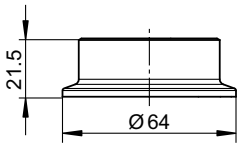

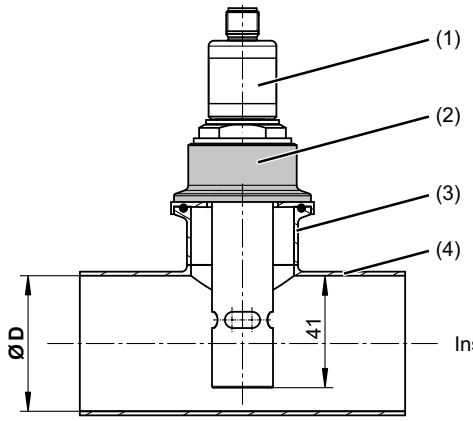

Installation example

Clamp socket DN[a]	T-piece DN[a]	Ø D
25/32/40	50 - 25/32/40	50
	65 - 25/32/40	70
	80 - 25/32/40	81
	100 - 25/32/40	100
	125 - 25/32/40	125
	150 - 25/32/40	150
50	50 - 50	50
	65 - 50	70
	80 - 50	81
	100 - 50	100
	125 - 50	125
	150 - 50	150

[a] To be provided by the customer.

O-ring not included in the scope of delivery!

(1) JUMO tecLine CR-PEKA sensor
(2) Clamp process adapter
(3) Clamp socket DIN 32676
(4) Short T-piece, similar to DIN 11852

Aseptic DN 40
Part no.: 00577995

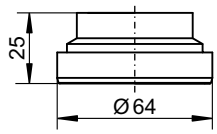

Aseptic DN 50
Part no.: 00577979

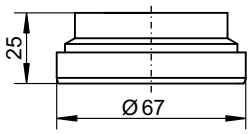

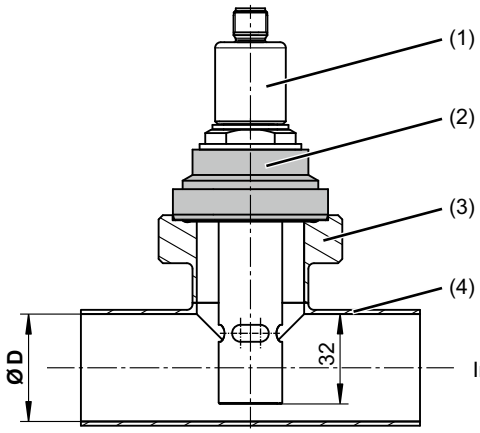

Installation example

Threaded connection DN[a]	T-piece DN[a]	Ø D
40	40 - 40	38
	50 - 40	50
	65 - 40	70
	80 - 40	81
	100 - 40	100
	125 - 40	125
	150-40	150
50	50 - 50	50
	65 - 50	70
	80 - 50	81
	100 - 50	100
	125 - 50	125
	150 - 50	150

[a] To be provided by the customer.

O-ring not included in the scope of delivery!

(1) JUMO tecLine CR-PEKA sensor
(2) Aseptic process adapter
(3) Threaded connection DIN 11864-1
(4) Short T-piece, similar to DIN 11852

JUMO GmbH & Co. KG
Delivery address: Mackenrodtstraße 14
36039 Fulda, Germany
Postal address: 36035 Fulda, Germany
Phone: +49 661 6003-0
Fax: +49 661 6003-607
Email: mail@jumo.net
Internet: www.jumo.net

JUMO Instrument Co. Ltd.
JUMO House
Temple Bank, Riverway
Harlow, Essex, CM20 2DY, UK
Phone: +44 1279 63 55 33
Fax: +44 1279 62 50 29
Email: sales@jumo.co.uk
Internet: www.jumo.co.uk

JUMO Process Control, Inc.
6733 Myers Road
East Syracuse, NY 13057, USA
Phone: +1 315 437 5866
Fax: +1 315 437 5860
Email: info.us@jumo.net
Internet: www.jumousa.com

Aseptic NKS DN 40
Part no.: 00577999

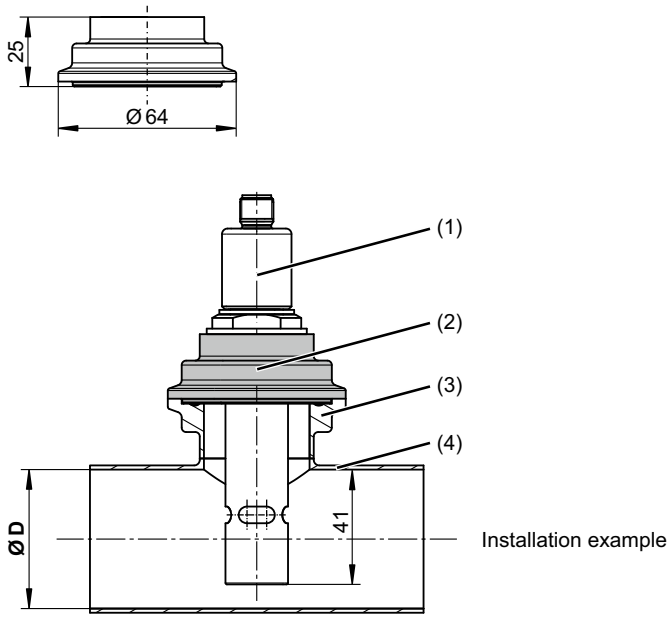

Installation example

(1) JUMO tecLine CR-PEKA sensor
(2) Aseptic process adapter NKS DN 40
(3) Collar clamp socket DIN 11864-3
(4) Short T-piece, similar to DIN 11852

Collar clamp socket[a]	T-piece DN[a]	Ø D
NKS DN 40 form A	50 - 40	50
	65 - 40	70
	80 - 40	81
	100 - 40	100
	125 - 40	125
	150 - 40	150

[a] To be provided by the customer.

O-ring not included in the scope of delivery!

JUMO GmbH & Co. KG
Delivery address: Mackenrodtstraße 14
36039 Fulda, Germany
Postal address: 36035 Fulda, Germany
Phone: +49 661 6003-0
Fax: +49 661 6003-607
Email: mail@jumo.net
Internet: www.jumo.net

JUMO Instrument Co. Ltd.
JUMO House
Temple Bank, Riverway
Harlow, Essex, CM20 2DY, UK
Phone: +44 1279 63 55 33
Fax: +44 1279 62 50 29
Email: sales@jumo.co.uk
Internet: www.jumo.co.uk

JUMO Process Control, Inc.
6733 Myers Road
East Syracuse, NY 13057, USA
Phone: +1 315 437 5866
Fax: +1 315 437 5860
Email: info.us@jumo.net
Internet: www.jumousa.com

Electrical connection

Connection for	right-angle connector	M12 connector	Fixed cable
Outer electrode	⏚	1	White
Inner electrode	2	2	Brown
Temperature compensation (optional extra)	1 3	3 4	Yellow Green
3-wire circuit		5	

JUMO GmbH & Co. KG
Delivery address: Mackenrodtstraße 14
36039 Fulda, Germany
Postal address: 36035 Fulda, Germany
Phone: +49 661 6003-0
Fax: +49 661 6003-607
Email: mail@jumo.net
Internet: www.jumo.net

JUMO Instrument Co. Ltd.
JUMO House
Temple Bank, Riverway
Harlow, Essex, CM20 2DY, UK
Phone: +44 1279 63 55 33
Fax: +44 1279 62 50 29
Email: sales@jumo.co.uk
Internet: www.jumo.co.uk

JUMO Process Control, Inc.
6733 Myers Road
East Syracuse, NY 13057, USA
Phone: +1 315 437 5866
Fax: +1 315 437 5860
Email: info.us@jumo.net
Internet: www.jumousa.com

Order details

						(1)	**Basic type**
					202924/10		JUMO tecLine CR-VA conductive 2-electrode conductivity sensor
					202924/20		JUMO tecLine CR-VA SL conductive 2-electrode conductivity sensor
					202924/21		JUMO tecLine CR-VA SL conductive 2-electrode conductivity sensor, short design
					202924/30		JUMO tecLine CR-PK conductive 2-electrode conductivity sensor
					202924/31		JUMO tecLine CR-PL conductive 2-electrode conductivity sensor
						(2)	**Cell constant**
X	X	X	X	X	0001		K = 0.01 (measuring range 0.05 to 20 MΩcm or 0.05 to 20 µS/cm)[a]
X	X	X	X	X	0010		K = 0.1 (measuring range 0.1 µS/cm to 1 mS/cm)[a]
						(3)	**Measuring insert**
X	X	X			0000		None
X	X	X			1003		1 × Pt100 in 2-wire circuit
X	X	X	X	X	1005		1 × Pt1000 in 2-wire circuit
						(4)	**Process connection**
X	X				104		Thread G 1/2 A
X					105		Thread G 3/4 A
X					106		Thread G 1 A
X					144		Thread 1/2"-14 NPT
X					145		Thread 3/4"-14 NPT
X					604		Taper socket for union nut DN 25 DIN 11851 (dairy pipe fitting)
X	X	X			613		Clamp DN 25
			X	X	997		JUMO PEKA[b] hygienic process connection (adapter system)
						(5)	**Electrical connection**
X	X	X			17		Permanent cable connection, line length 5 m
X	X	X			37		Right-angle connector according to DIN EN 175301-803
	X	X	X	X	83		M12 connector
						(6)	**Process connection material**
X					24		Stainless steel 1.4404 (only in HT version (extra code 765))
X					26		Stainless steel 1.4571
X	X	X	X	X	31		Stainless steel 1.4435 (similar to 316L, version for pharmaceutical industry)
X					88		PVDF (default)
						(7)	**Electrode material**
X	X	X			24		Stainless steel 1.4404 (only in HT version (extra code 765))
X					26		Stainless steel 1.4571
X	X	X	X	X	31		Stainless steel 1.4435 (similar to 316L, version for pharmaceutical industry)
X	X	X			60		Titanium[c]
						(8)	Extra codes
X	X	X	X	X	000		None
X	X	X	X	X	374		Acceptance test certificate 3.1 material, according to DIN EN 10204
X					765		High temperature (HT) version[d] (Cell constant K = 0.1)
X	X	X	X	X	864		Acceptance test certificate 3.1 material, surface roughness ≤ 0.8 µm[e] (apart from the weld seam), according to DIN EN 10204
X	X	X	X	X	955		ASTM test report
X	X	X	X	X	956		FDA certificate

[a] The measuring ranges depend on the transducer being used. When used in measuring ranges larger than the "typical" one, incorrect measured values may occur due to polarization.

[b] Please order PEKA adapters separately, see accessories.

[c] Only available in connection with process connection material 88 (PVDF).

[d] Only available with process connection 145 (thread 3/4"-14 NPT).

[e] Acceptance test certificates with surface roughness ≤ 0.6 µm or ≤ 0.4 µm upon request.

JUMO GmbH & Co. KG
Delivery address: Mackenrodtstraße 14
36039 Fulda, Germany
Postal address: 36035 Fulda, Germany
Phone: +49 661 6003-0
Fax: +49 661 6003-607
Email: mail@jumo.net
Internet: www.jumo.net

JUMO Instrument Co. Ltd.
JUMO House
Temple Bank, Riverway
Harlow, Essex, CM20 2DY, UK
Phone: +44 1279 63 55 33
Fax: +44 1279 62 50 29
Email: sales@jumo.co.uk
Internet: www.jumo.co.uk

JUMO Process Control, Inc.
6733 Myers Road
East Syracuse, NY 13057, USA
Phone: +1 315 437 5866
Fax: +1 315 437 5860
Email: info.us@jumo.net
Internet: www.jumousa.com

	(1)		(2)		(3)		(4)		(5)		(6)		(7)		(8)
Order code		-		-		-		-		-		-		/	
Order example	202924/10	-	0010	-	1003	-	105	-	37	-	88	-	26	/	000

Important information:

The order code is not modular. When placing orders, if possible please select the items listed under **"Stock versions"** or **"Production versions"**.
We must check the technical feasibility of and approve freely chosen combinations of individual code parts.

Stock versions

Standard

Delivery within 3 working days after receipt of order

Order code	Brief description	Part no.
202924/10-0010-0000-105-37-88-26/000	K = 0.1/G 3/4A	00300203
202924/10-0010-1003-105-37-88-26/000	K = 0.1/Pt100/G 3/4A	00300202
202924/10-0010-1003-104-37-88-26/000	K = 0.1/Pt100/G 1/2A	00338487
202924/10-0001-0000-105-37-88-26/000	K = 0.01/G 3/4A	00300204
202924/10-0001-1003-105-37-88-26/000	K = 0.01/Pt100/G 3/4A	00300079
202924/10-0001-1003-106-37-88-26/000	K = 0.01/Pt100/G 1A	00089393
202924/20-0010-1003-104-83-31-31/000	K = 0.1/Pt100/G 1/2A/Ø 16 mm	00456809
202924/20-0001-1003-104-83-31-31/000	K = 0.01/Pt100/G 1/2A/Ø 16 mm	00452527

Pharmaceutical packages with certificates

Order code	Cell constant	Measuring insert	Brief description	Part no.
202924/10-0001-1003-613-37-31-31/864,955,956	K = 0.01	Pt100 class A	Clamp DN 25 and object in stainless steel 1.4435, packed air tight in foil, incl. ASTM test report, FDA certificate for insulators and O-rings, inspection certificate 3.1, R_a < 0.8 µm	00420617
202924/10-0010-1003-613-37-31-31/864,955,956	K = 0.1			00405886
202924/20-0001-1003-613-83-31-31/864,955,956	K = 0.01			00456810
202924/20-0010-1003-613-83-31-31/864,955,956	K = 0.1			00456812
202924/21-0001-1005-613-83-31-31/864,955,956	K = 0.01	Pt1000 class A		00620488
202924/21-0010-1005-613-83-31-31/864,955,956	K = 0.1			00620490
202924/30-0001-1005-997-83-31-31/ 864,955[a],956	K = 0.01			00562982
202924/30-0010-1005-997-83-31-31/ 864,955[a],956	K = 0.1			00562983
202924/31-0001-1005-997-83-31-31/ 864,955[a],956	K = 0.01			00562984
202924/31-0010-1005-997-83-31-31/ 864,955[a],956	K = 0.1			00562986

[a] Please order PEKA adapters separately, see accessories.

JUMO GmbH & Co. KG
Delivery address: Mackenrodtstraße 14
36039 Fulda, Germany
Postal address: 36035 Fulda, Germany
Phone: +49 661 6003-0
Fax: +49 661 6003-607
Email: mail@jumo.net
Internet: www.jumo.net

JUMO Instrument Co. Ltd.
JUMO House
Temple Bank, Riverway
Harlow, Essex, CM20 2DY, UK
Phone: +44 1279 63 55 33
Fax: +44 1279 62 50 29
Email: sales@jumo.co.uk
Internet: www.jumo.co.uk

JUMO Process Control, Inc.
6733 Myers Road
East Syracuse, NY 13057, USA
Phone: +1 315 437 5866
Fax: +1 315 437 5860
Email: info.us@jumo.net
Internet: www.jumousa.com

Manufacturing versions

Standard

Delivery within 10 working days after receipt of order

Order code	Brief description	Part no.
202924/10-0001-0000-105-37-26-26/000	K = 0.01/G 3/4 A/process connection 1.4571	00353041
202924/10-0001-1003-604-37-88-26/000	K = 0.01/Pt100/dairy pipe fitting	00089395
202924/10-0010-1003-106-37-88-26/000	K = 0.1/Pt100/G 1A	00089389
202924/10-0010-0000-105-37-26-26/000	K = 0.1/G 3/4 A/process connection 1.4571	00350627
202924/10-0010-1003-613-37-26-26/000	K = 0.1/Pt100/clamp DN 25/process connection 1.4571	00322533

High temperature version

Order code	Brief description	Part no.
202924/10-0010-1003-145-37-24-24/765	K = 0.1/Pt100/NPT3/4-14	00397615

Accessories

Cable

Item	Part no.
Connecting cable, length 25 m, assembly by user, 4-pin + screen	00303681
Connecting cable, length 50 m, assembly by user, 4-pin + screen	00304181
Connecting cable including M12 cable socket (straight), length 10 m, 4-pin + screen	00458513
Connecting cable including M12 cable socket (straight), length 25 m, 4-pin + screen	00458514
Cable box M12 × 1, 4-pin, 713 series, angled form (cable not included in scope of delivery), gold-plated contacts	00318906

JUMO PEKA process connection adapter

Item	Part no.
... for VARIVENT® DN 40 - 125, stainless steel 1.4435/316 L[a]	00577961
... for clamp DN 25/32/40, stainless steel 1.4435/316 L[a]	00577998
... for clamp DN 50, stainless steel 1.4435/316 L[a]	00577997
... for aseptic DN 40, stainless steel 1.4435/316 L[a]	00577995
... for aseptic DN 50, stainless steel 1.4435/316 L[a]	00577979
... for aseptic NKS DN 40, stainless steel 1.4435/316 L[a]	00577999
Welding socket M 28, Ø 55 mm, stainless steel 1.4435/316L	00447190
Orbital welding socket DN 25, stainless steel 1.4435/316L	00530211
Orbital welding socket DN 32, stainless steel 1.4435/316L	00530212
Orbital welding socket DN 40, stainless steel 1.4435/316L	00531973

[a] Including inspection certificate 3.1, R_a < 0.8 µm