Enclosed Reversing DC Drives

Model 400ER **Model 800ER** **Model 1200ER**



A range of enclosures for professional use.

From 0.5KW to 1.8KW

Features Include:

- Mains On/Off Switch.
- Dual Voltage Supply.
- Set speed potentiometer with graduated scale.
- Zero Speed Interlocked Reversing
- Dynamic Braking
- Reverse Toggle Switch







Ratings

Model:	Nominal AC Supply Range	Typical Armature Voltage	Field Voltage	Max Continuous Armature Current	Nominal Power	Dimensions W x H x D (mm)
400 ER	110/240v	90/180v	100/210v	4 amps	0.55 KW	177 x 250 x 100
800 ER				8 amps	1.1 KW	
1200 ER				12 amps	1.8 KW	

Note:
Units are Factory preset for 240V AC, for use with 110V AC change mains selector jumper on drive unit and move AC input from terminal 21 to 22 on the reversing unit

External Fuses:
HRC type minimum 1.5 x Armature Current

SPRINT ELECTRIC
www.sprint-electric.com

Sprint Electric Limited
Peregrine House, Ford Lane, Ford, Arundel
West Sussex, UK, BN18 0DF
+44 (0)1243 558080 info@sprint-electric.com

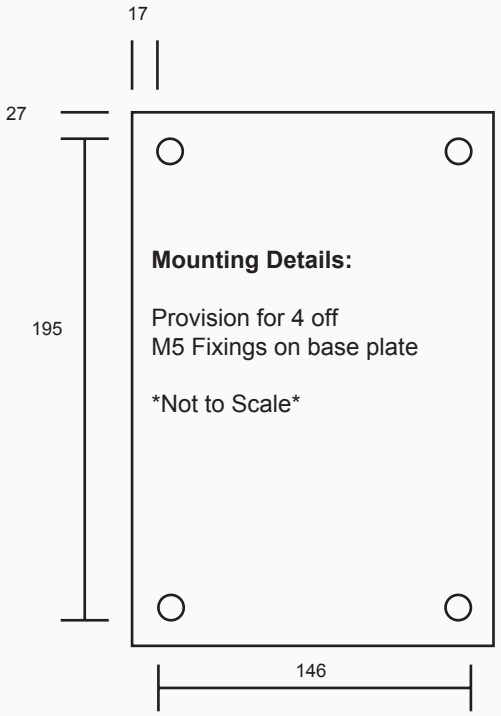

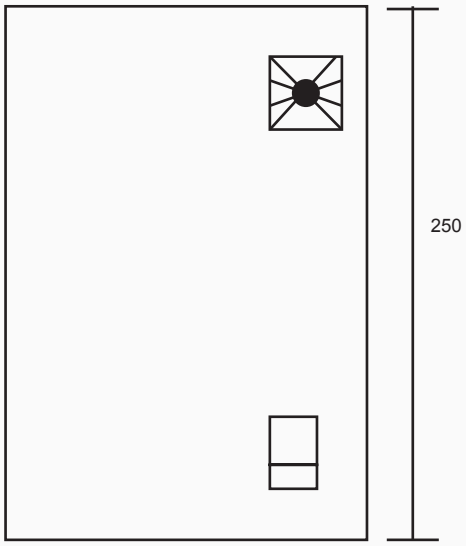

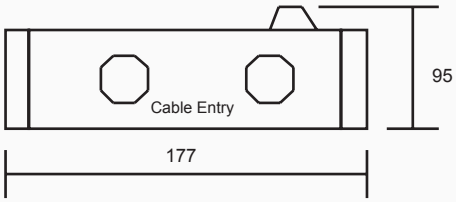

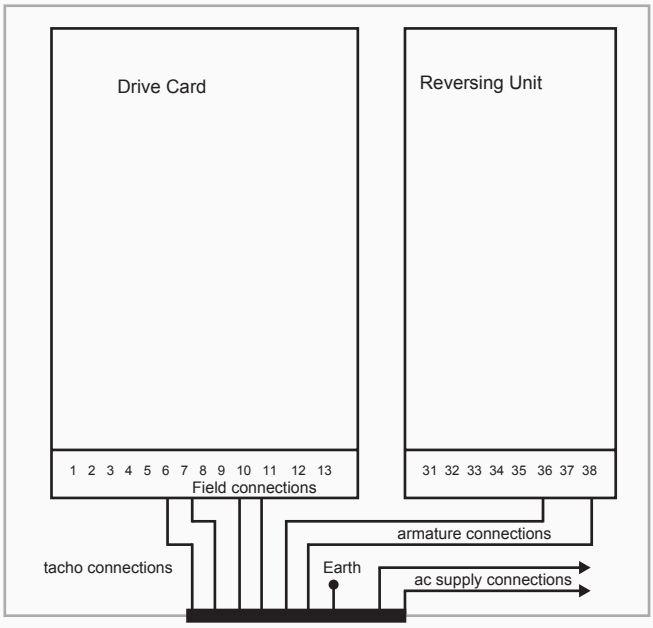

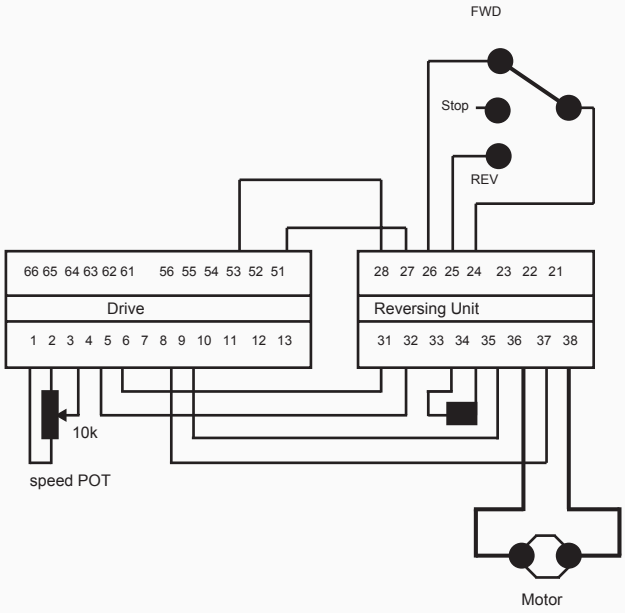

Sprint Electric Limited
Peregrine House, Ford Lane, Ford, Arundel
West Sussex, UK, BN18 0DF
+44 (0)1243 558080 info@sprint-electric.com