Filter pressure regulator, Series NL1-FRE

- G 1/8 G 1/4
- filter porosity 5 µm
- suitable for ATEX



Type	1-part, Can be assembled into blocks
Parts	Filter pressure regulator
Mounting orientation	vertical
Certificates	suitable for ATEX
Working pressure min./max.	1,5 ... 16 bar
Ambient temperature min./max.	-10 ... 60 °C
Medium temperature min./max.	-10 ... 60 °C
Medium	Compressed air Neutral gases
Nominal flow Qn	1350 l/min
Regulator type	Diaphragm-type pressure regulator
Regulator function	with relieving air exhaust
Adjustment range min./max.	0,5 ... 10 bar
Pressure supply	single
Filter reservoir volume	16 cm³
Filter element	exchangeable
Weight	See table below

Technical data

Part No.			Port	filter porosity	Flow Qn
0821300750			G 1/8	5 µm	1350 l/min
0821300751			G 1/8	5 µm	1350 l/min
0821300752			G 1/8	5 µm	1350 l/min
0821300753		–	G 1/8	5 µm	1350 l/min
0821300754		–	G 1/8	5 µm	1350 l/min
0821300755		–	G 1/8	5 µm	1350 l/min
0821300756			G 1/4	5 µm	1350 l/min
0821300757			G 1/4	5 µm	1350 l/min
0821300758			G 1/4	5 µm	1350 l/min
0821300759		–	G 1/4	5 µm	1350 l/min
0821300760		–	G 1/4	5 µm	1350 l/min
0821300761		–	G 1/4	5 µm	1350 l/min

Part No.	Condensate drain	Pressure gauge	Reservoir
0821300750	semi-automatic, open without pressure	with pressure gauge	Polycarbonate
0821300751	semi-automatic, open without pressure	with pressure gauge	Die cast zinc
0821300752	fully automatic, open without pressure	with pressure gauge	Polycarbonate
0821300753	semi-automatic, open without pressure	-	Polycarbonate
0821300754	semi-automatic, open without pressure	-	Die cast zinc
0821300755	fully automatic, open without pressure	-	Polycarbonate
0821300756	semi-automatic, open without pressure	with pressure gauge	Polycarbonate

Part No.	Condensate drain	Pressure gauge	Reservoir
0821300757	semi-automatic, open without pressure	with pressure gauge	Die cast zinc
0821300758	fully automatic, open without pressure	with pressure gauge	Polycarbonate
0821300759	semi-automatic, open without pressure	-	Polycarbonate
0821300760	semi-automatic, open without pressure	-	Die cast zinc
0821300761	fully automatic, open without pressure	-	Polycarbonate

Part No.	Weight	
0821300750	0,334 kg	1)
0821300751	0,383 kg	1)
0821300752	0,387 kg	1)
0821300753	0,334 kg	2)
0821300754	0,383 kg	2)
0821300755	0,387 kg	2)
0821300756	0,334 kg	1)
0821300757	0,383 kg	1)
0821300758	0,387 kg	1)
0821300759	0,334 kg	2)
0821300760	0,383 kg	2)
0821300761	0,387 kg	2)

Nominal flow Qn with secondary pressure p2 = 6 bar at Δp = 1 bar

1) Pressure gauge enclosed separately, Metal protective guard can be retrofitted for all polycarbonate reservoirs, Suitable for use in Ex zones 1, 2, 21, 22.

2) Order pressure gauge separately, Metal protective guard can be retrofitted for all polycarbonate reservoirs, Suitable for use in Ex zones 1, 2, 21, 22.

Technical information

The pressure dew point must be at least 15 °C under ambient and medium temperature and may not exceed 3 °C .
Suitable for use in Ex zones 1, 2, 21, 22.
A change in the flow direction (from air supply on the left to air supply on the right) occurs by rotating installation by 180° about the vertical axis. Please see the operating instructions for further details.
Also suitable for separation of fluid oil or water due to the design.
The rear pressure gauge connection on the pressure regulator is closed with a blanking plug, the front connection is open. Depending on the customer application, a second blanking plug may be necessary. Please order separately (see accessories).

Max. achievable compressed air class acc. to ISO 8573-1:2010 6 : 7 : -

Technical information

Material	
Housing	Die cast zinc
Front plate	Acrylonitrile butadiene styrene
Seals	Acrylonitrile butadiene rubber
Threaded bushing	Die cast zinc
Reservoir	Polycarbonate Die cast zinc
Filter insert	Polyethylene

Dimensions

Dimensions

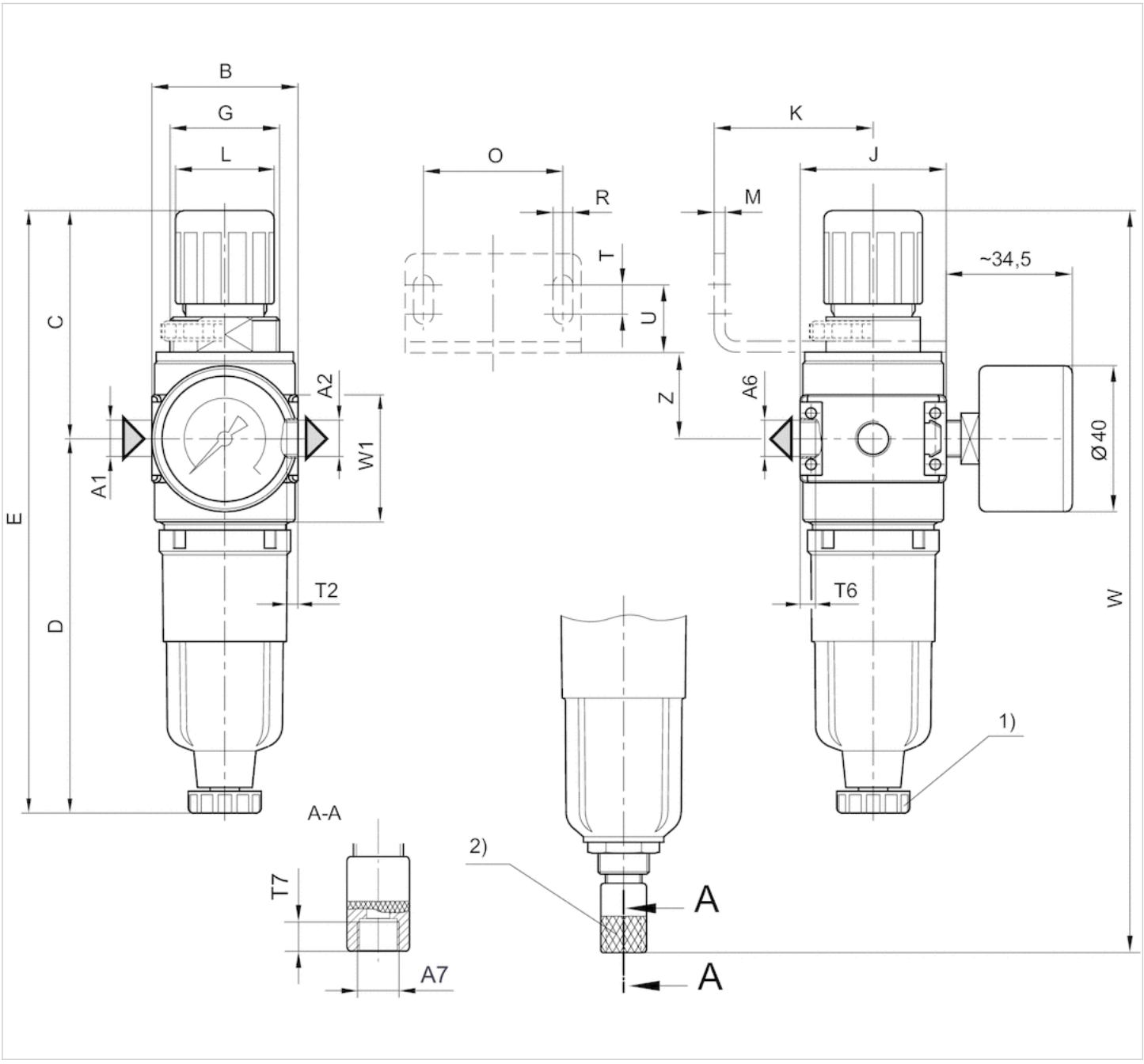

A1 = input
A2 = output
A4 = output
A6 = output
1) Semi-automatic condensate drain
2) fully automatic condensate drain

Dimensions in mm

A1	A2	A3	A6	A7	B	C	D	E	G	J	K	L	M	O	R	T	T2	T6	T7	U
G 1/8	G 1/8	G 1/8	G 1/8	G 1/8	40	62.5	102.5	165	M30x1,5	40	43.5	27	3	38	5.4	8	8	6	8.5	18.5
G 1/4	G 1/4	G 1/8	G 1/8	G 1/8	40	62.5	102.5	165	M30x1,5	40	43.5	27	3	38	5.4	8	8	6	8.5	18.5

W	W1	Z
203	44	24.5
203	44	24.5

Diagrams

Pressure characteristics curve

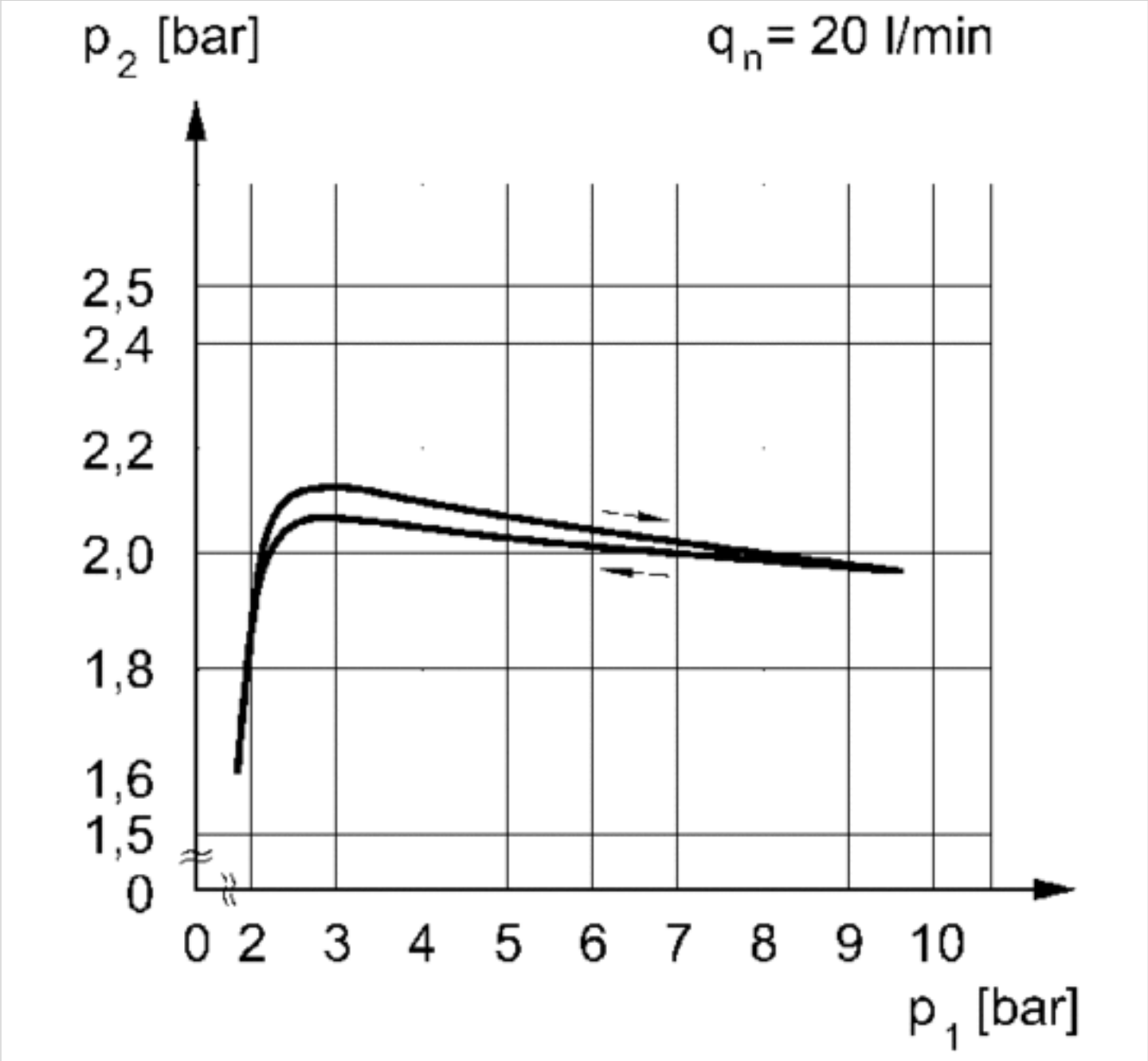

p1 = Working pressure
p2 = Secondary pressure

qn = Nominal flow

Flow rate characteristic

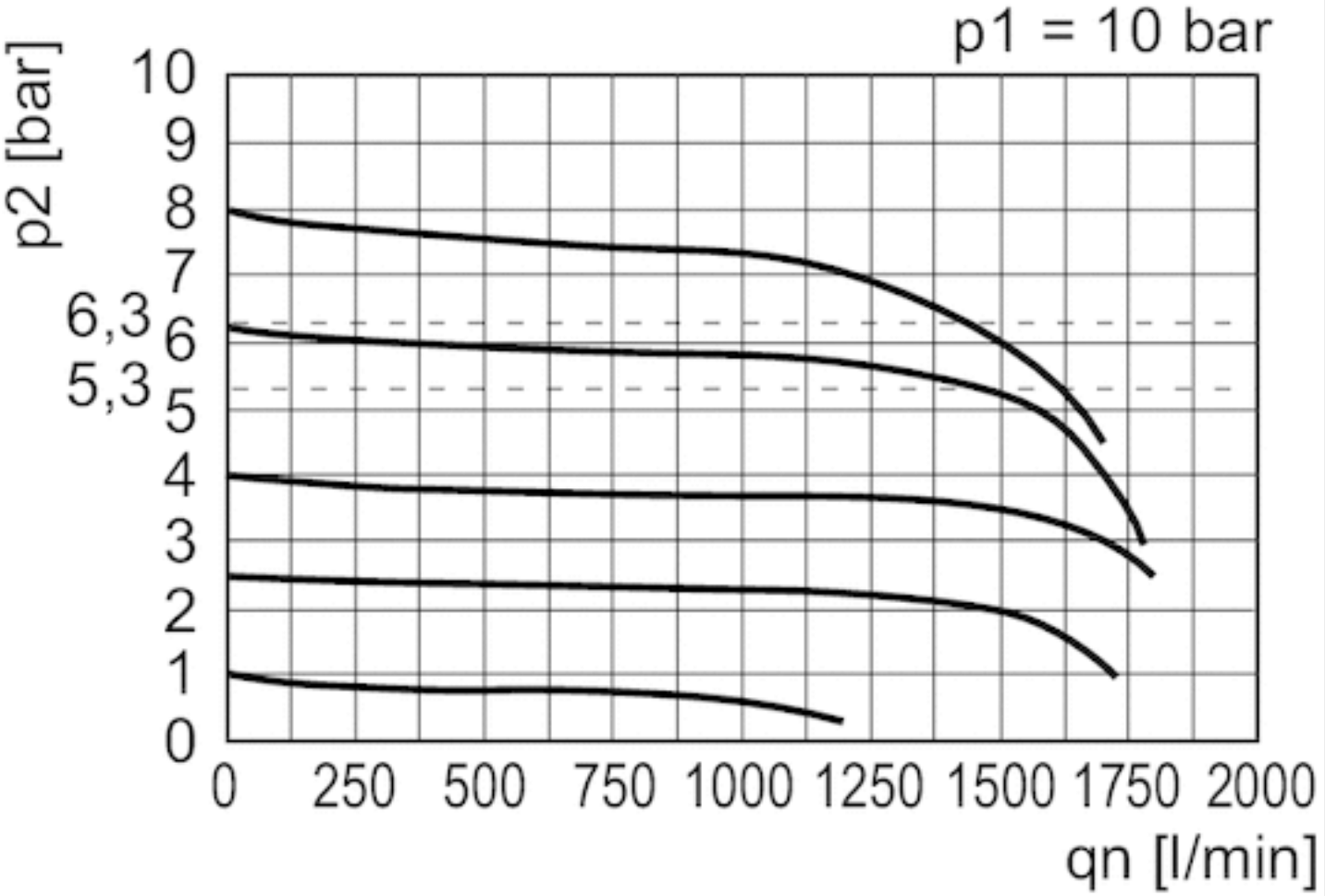

p1 = Working pressure
p2 = Secondary pressure
qn = Nominal flow