HENGSTLER

TECHNICAL DATASHEET

Absolute Encoder AC58 - SSI / BISS-B / BISS-C



Clamping flange

- Compact design: 50 mm length for single or multiturn
- Aids for start up and operation: diagnostic LED, preset key with optical response, status information
- Temperature Range: - 40 bis +100°C
- Control input: Preset and Direction
- Resolution up to: 22 Bit Singleturn + 12 Bit Multiturn (34Bit)
- Interfaces: SSI, BISS-B & BISS C
- Use of sine/cosine signals for fast control task possible (2048 Impulses)

TECHNICAL DATA mechanical

Housing diameter	58 mm
Shaft diameter	6 / 8 / 9,52 / 10 / 12mm (solid shaft) 9,52 / 10 / 12 / 12,7 / 14mm (hub shaft)
Flange (Mounting of housing)	Synchro flange, Clamping flange, Tether, Square flange
Protection class shaft input (EN 60529)	IP64 or IP67
Protection class housing (EN 60529)	IP64 or IP67
Shaft load axial/ radial	40 N / 60 N
Axial endplay of mounting shaft (hub shaft)	±1.5 mm
Radial runout of mating shaft (hub shaft)	±0.2 mm
Max. speed	max. 10,000 U/min (continuous) max. 12,000 U/min (short term) (higher values on request)
Starting torque typ.	≤ 0.01 Nm (low values on request)
Moment of inertia	ca. 3.8 x 10^{-6} kgm^2
Vibration resistance (DIN EN 60068-2-6)	100 m/s^2 (10 - 2000 Hz)
Shock resistance (DIN EN 60068-2-27)	1000 m/s^2 (6 ms)
Operating temperature	-40 °C ... +100 °C
Storage temperature[1]	-40 °C ... +85 °C
Material shaft	Stainless steel
Material housing	Aluminium (Option: Stainless steel, synchro flange & square flange)
Weight	ca. 260g (ST) 310 g (MT)
Connection	Cable, axial or radial M23 Connector, 12-pole, axial or radial M12 Connector, 8-pole, axial or radial

[1] due to packaging

TECHNICAL DATA electrical

Supply voltage	DC 5 V ±10% / 10 - 30 V
Current w/o load typ.	100 mA (ST), 150 mA (MT)
EMC	EN 61326
Resolution Singleturn	10-22 Bit
Resolution Multiturn	12 Bit

Subject to errors and changes

Absolute Encoder AC58 - SSI / BISS-B / BISS-C

TECHNICAL DATA
electrical (continue)

Output code	Binary, Gray
Driver	Clock and Data / RS422
Incremental signals	Sinus-Cosinus 1Vss
Number of pulses	2048
3 dB limiting frequency	500 kHz
Absolute accuracy	±35" typ.
Control input	Preset, $\overline{\text{Direction}}$
Parametrization	Code type, Direction, Warning, Alarm
Alarm output	Alarm bit (SSI-Option), Warn bit & Alarm bit (BISS)
Protocol Protection	Parity Even (SSI-Option), CRC (BISS-B) CRC + Live Counter (BISS-C)
Status LED	Green= ok, Red= alarm

RECOMMENDED DATA TRANSFER RATE SSI

The max. data Transfer rate depends on the cable length. For Clock, $\overline{\text{Clock}}$ and Data, $\overline{\text{Data}}$ please use twisted pairs. Use shielded cable

Cable length	Clock rate
< 50 m	< 400 kHz
< 100 m	< 300 kHz
< 200 m	< 200 kHz
< 300 m	< 100 kHz

DATA FORMAT SSI SINGLETURN

Resolution	**Data Bits**										
	T1...T9	T10	T11	T12	T13	T14	T15	T16	T17	T18	T19
9 Bit[1]	S8… S0	0	0	0	0	0	W[2]				
10 Bit[1]	S9… S1	S0	0	0	0	0	W[2]				
11 Bit[1]	S10...S2	S1	S0	0	0	0	W[2]				
12 Bit[1]	S11...S3	S2	S1	S0	0	0	W[2]				
13 Bit[1]	S12...S4	S3	S2	S1	S0	0	W[2]				
14 Bit[1]	S13...S5	S4	S3	S2	S1	S0	0	W[2]			
15 Bit[1]	S14...S6	S5	S4	S3	S2	S1	S0	0	0	0	W[2]
16 Bit[1]	S15...S7	S6	S5	S4	S3	S2	S1	S0	0	0	W[2]
17 Bit[1]	S16...S8	S7	S6	S5	S4	S3	S2	S1	S0	0	W[2]
Examples for data Format 9 Bit and 13 Bit with the optional bits alarm und parity											
	T1...T9	T10	T11	T12	T13	T14	T15	T16	T17	T18	T19
9 Bit + P[3]	S8...S0	0	0	0	P	0	W[2]				
9 Bit + A[4]	S8...S0	0	0	0	A	0	W[2]				
9 Bit + P[3] + A[4]	S8...S0	0	0	0	A	P	0	W[2]			
13 Bit + P[3]	S12...S4	S3	S2	S1	S0	P	0	W[2]			
13 Bit + A[4]	S12...S4	S3	S2	S1	S0	A	0	W[2]			
13 Bit + P[3] + A[4]	S12...S4	S3	S2	S1	S0	A	P	0	W[2]		

Absolute Encoder AC58 - SSI / BISS-B / BISS-C

DATA FORMAT SSI MULTITURN

Resolution	Data bits									
	T1...T12	T13...T23	T24	T25	T26	T27	T28	T29	T30	T31
24 Bit[1]	M11...M0	S11...S1	S0	0	W[2]					
25 Bit[1]	M11...M0	S12...S2	S1	S0	0	W[2]				
26 Bit[1]	M11...M0	S13...S3	S2	S1	S0	0	W[2]			
27 Bit[1]	M11...M0	S14...S4	S3	S2	S1	S0	0	0	0	W[2]
28 Bit[1]	M11...M0	S15...S5	S4	S3	S2	S1	S0	0	0	W[2]
29 Bit[1]	M11...M0	S16...S6	S5	S4	S3	S2	S1	S0	0	W[2]
Example for data format 24 Bit with the optional Bits Alarm and Parity										
24 Bit + P[3]	M11...M0	S11...S1	S0	P	0	W[2]				
24 Bit + A[4]	M11...M0	S11...S1	S0	A	0	W[2]				
24 Bit + P[3] + A[4]	M11...M0	S11...S1	S0	A	P	0	W[2]			

S0...S16 Data bits for resolution per revolution
M0...M11 Data bits for number of revolution (only for multiturn)
[1] Option (Parity bit, Alarm– and Parity bit, zero bit) on request
[2] W: from this data bit on the data iteration for multiplex starts
[3] Parity bit: Even Parity (the parity bit extends the data bits to an even number of 1-Bits.). (Option)
[4] Alarm bit: is set to "1" when over temperature, under temperature, undervoltage, disc breakage and defect LED.

SYNCHRONOUS-SERIAL TRANSFER (SSI)

- Synchronous readout of the encoder data is according to the clock rate given by the SSI-counterpart. The number of clock rates is determined by the type of encoder (Singleturn resp. multiturn) and the configuration of the Special Bits as defined.
  For multiple transactions (the stored value is readout several times successively) a fixed clock rate per transaction must be kept (for singleturn 13 resp. 14 clocks, for multiturn 25 resp. 26 clocks).
- In the rest position, when the last clock brush has passed by more than 30µs, the data output is logically at "1".
- With the first descending clock edge the encoder data and the special bits are loaded in the shift register of the encoder interface
- With each ascending clock edge the data bits are serially readout, beginning with the MSB
- At the end of the data transfer the data output is set to logically "0" for approx. 20µs. If within these 20µs a further clock brush reaches the encoder interface, the already transferred data is readout once again. This multiple transfer of the same data makes it possible to recognize transfer errors
- After the 20µs the data output goes to its rest position, logically "1". Subsequently new encoder data can be readout.

TECHNICAL DATASHEET

Absolute Encoder AC58 - SSI / BISS-B / BISS-C

ELECTRICAL CONNECTIONS
M23-connector 12-pole / cable
Interface SSI, BISS-B, BISS-C

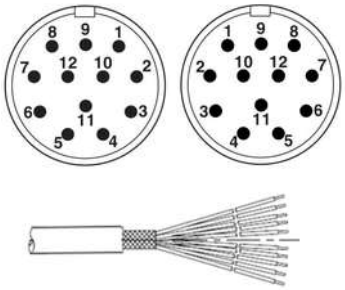

without Sin/Cos Signals (**SB, SG, BI, BE**)				**with** Sin/Cos Signals (**SD, SC, BC, BV**)		
PIN	**Colour**	**Signal**		**PIN**	**Colour**	**Signal**
1	brown	0V (supply voltage)		1	brown[2]	0V (supply voltage)
2	pink	Data		2	pink	Data
3	yellow	Clock		3	yellow	Clock
4		n.c.		4	white/green	A +
5	blue	$\overline{\text{Direction}}$[1]		5	blue	$\overline{\text{Direction}}$[1]
6		n.c.		6	red/ blue	B +
7		n.c.		7	brown/ green	A-
8	white	DC 5V /10-30V		8	white[2]	DC 5V /10-30V
9		n.c.		9	grey/ pink	B-
10	grey	$\overline{\text{Data}}$		10	grey	$\overline{\text{Data}}$
11	green	$\overline{\text{Clock}}$		11	green	$\overline{\text{Clock}}$
12	black	0V Signal– Output[2]		12	black	0V Signal-Output[2]
Housing	Screen	Screen		Housing	Screen	Screen

[1] $\overline{\text{Direction}}$: +Ub or unconnected = ascending code values with rotation cw.
0V= descending code values with rotation cw.

[2] Connected with 0V in the encoder.
Use this output to lay Direction on "0V" if required or with 5V variants for readjustment of the supply voltage ("Sense")

ELECTRICAL CONNECTIONS
M23-Connector 12-pole / cable
Interface SSI with PRESET (**SR, SH**)

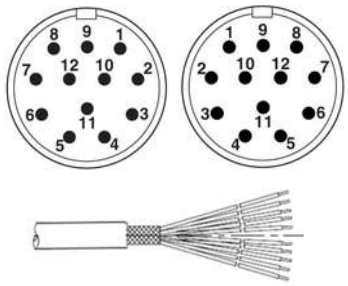

PIN	**Colour**	**Signal**
1	brown	0V (supply voltage)
2	pink	Data
3	yellow	Clock
4	white/green	n.c.
5	blue	$\overline{\text{Direction}}$[1]
6	red/blue	n.c.
7	brown/green	n.c.
8	white	DC 5V /10-30V
9	grey/pink	n.c.
10	grey	$\overline{\text{Data}}$
11	green	$\overline{\text{Clock}}$
12	red	PRESET[1]
Housing	Screen	Screen

[1] Preset and Direction high active:
Signal level high: ≥70% Ub; low: ≤20% Ub or unconnected.
Bounce time Preset: >2s
Bounce time direction: < 1ms (dynamic)
Preset-value: Zero
Other values on request

ELECTRICAL CONNECTIONS
M12-Connector 8-pole
Interface SSI, BISS-B, BISS-C **without** Sin/Cos Signals (**SB, SG , BI, BE**)



PIN	**Colour**	**Signal**
1	white	DC 5V /10-30V
2	brown	0V (supply voltage)
3		n.c.
4	green	$\overline{\text{Clock}}$
5	pink	Data
6	yellow	Clock
7	blue	$\overline{\text{Direction}}$[1]
8	grey	$\overline{\text{Data}}$

[1] Direction: +Ub or unconnected = ascending code values with rotation cw.
0V= descending code values with rotation cw.

Subject to errors and changes

DIMENSIONED DRAWING

Clamping flange „K“

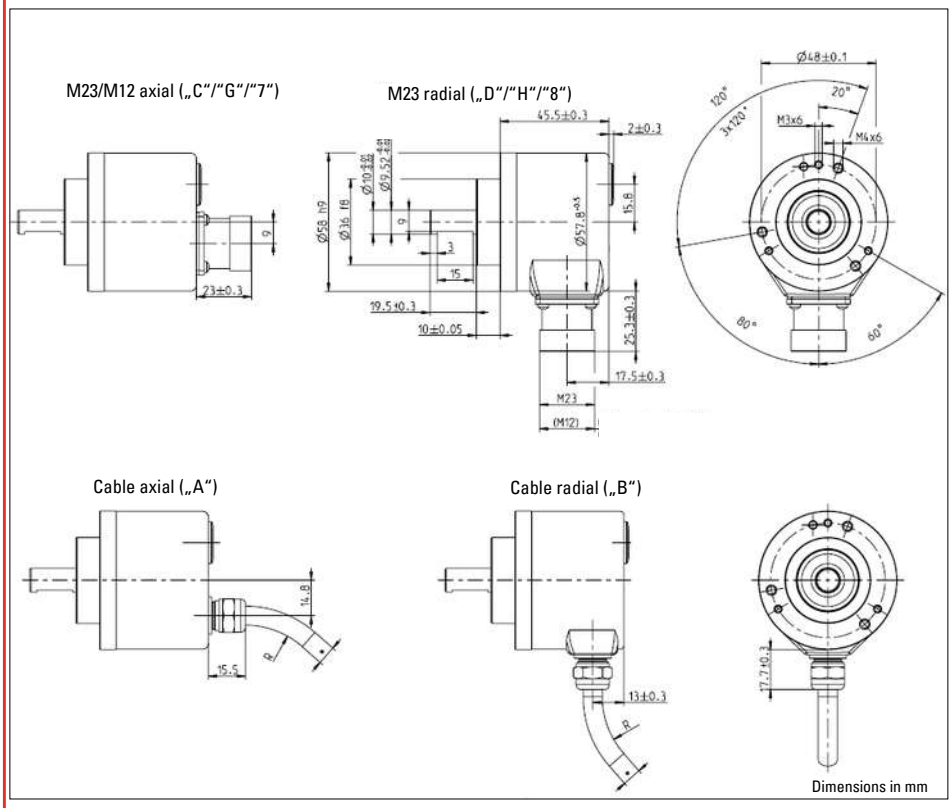

Cable bending radius R for flexible installation ≥ 15x Cable-diameter

Cable bending radius R for fixed installation ≥ 7,5x Cablediameter

cable Ø d 7,1 $^{+1,2}$

DIMENSIONED DRAWING

Synchro flange „S“

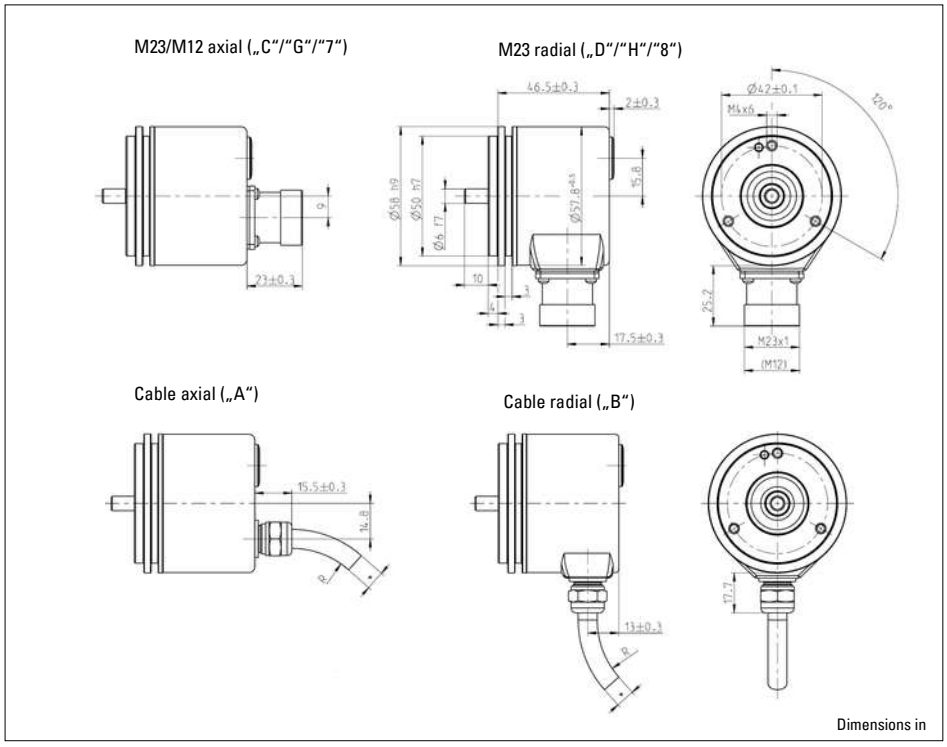

Cable bending radius R for flexible installation ≥ 15x Cable-diameter

Cable bending radius R for fixed installation ≥ 7,5x Cablediameter

cable Ø d 7,1 $^{+1,2}$

Subject to errors and changes

TECHNICAL DATASHEET

Absolute Encoder AC58 - SSI / BISS-B / BISS-C

DIMENSIONED DRAWING

Hollow shaft „F“

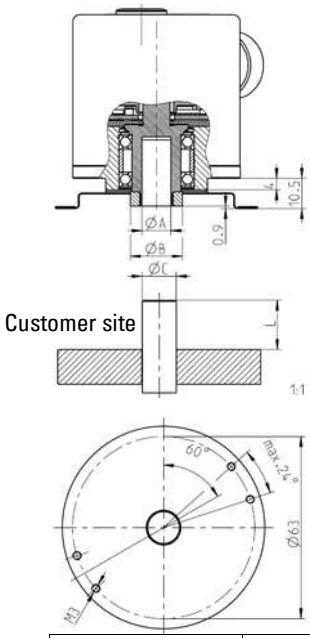

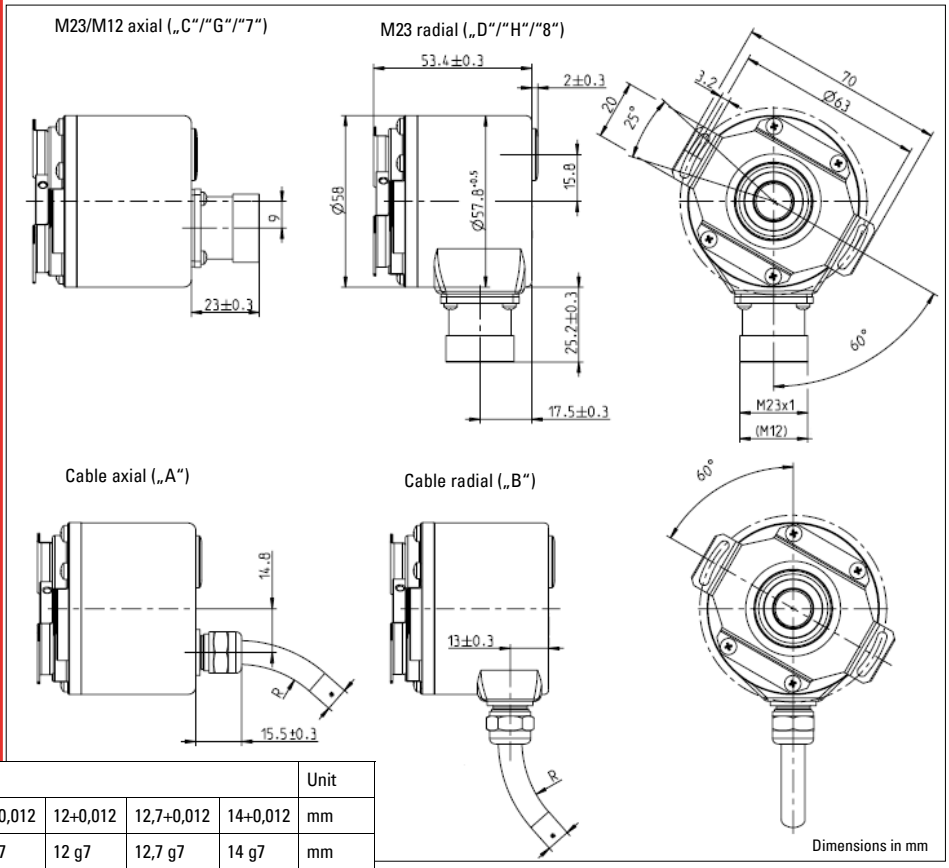

	Dim.					Unit
Hollow shaft - Ø A	9,52 +0,012	10 +0,012	12+0,012	12,7+0,012	14+0,012	mm
Connection shaft - Ø C	9,52 g7	10 g7	12 g7	12,7 g7	14 g7	mm
Clamping ring Ø B	18	18	20	22	22	mm
L min	15	15	18	18	18	mm
L max	20	20	20	20	20	mm
Shaft- Code	“6“	“2“	“7“	“E“	“9“	

L = Inside length of connection shaft

DIMENSIONED DRAWING

Square flange „Q“

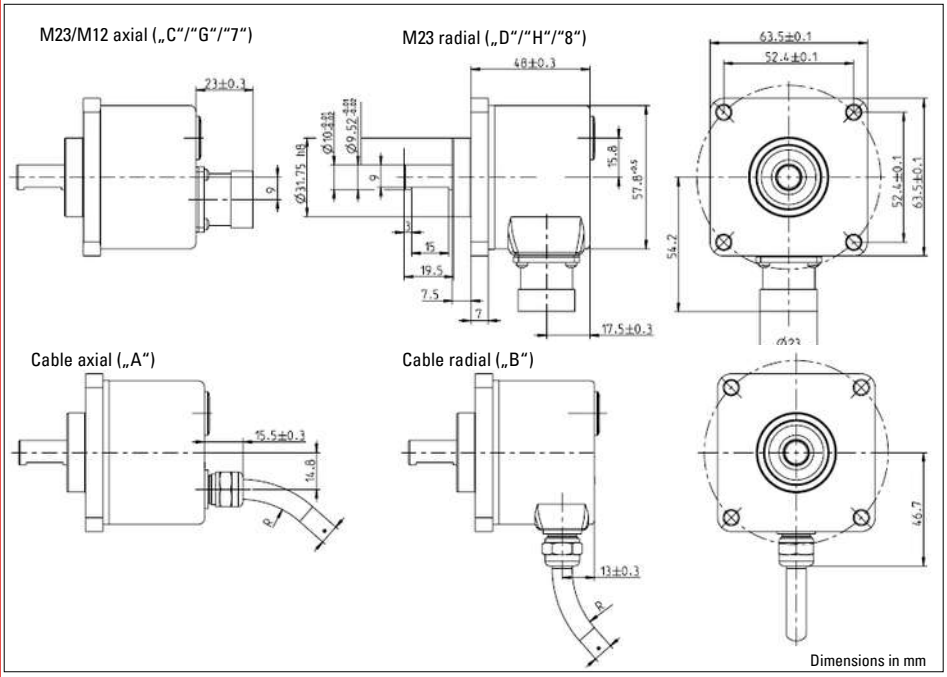

Cable bending radius R for flexible installation ≥ 15x Cable-diameter

Cable bending radius R for fixed installation ≥ 7,5x Cablediameter

cable Ø d 7,1 $^{+1,2}$

Subject to errors and changes

Absolute Encoder AC58 - SSI / BISS-B / BISS-C

ORDERING INFORMATION

Type	Resolution	Supply voltage	Flange, Protection, Shaft [1,5,7]	Interface [2,3]	Connection [4,6]
AC58	**0010** 10 Bit ST **0012** 12 Bit ST **0013** 13 Bit ST **0014** 14 Bit ST **0015** 15 Bit ST **0016** 16 Bit ST **0017** 17 Bit ST **0018** 18 Bit ST **0019** 19 Bit ST **0020** 20 Bit ST **0022** 22 Bit ST **1212** 12 Bit MT + 12 Bit ST **1213** 12 Bit MT + 13 Bit ST **1214** 12 Bit MT + 14 Bit ST **1215** 12 Bit MT + 15 Bit ST **1216** 12 Bit MT + 16 Bit ST **1217** 12 Bit MT + 17 Bit ST **1218** 12 Bit MT + 18 Bit ST **1219** 12 Bit MT + 19 Bit ST **1220** 12 Bit MT + 20 Bit ST **1222** 12 Bit MT + 22 Bit ST **Other on request**	**A** DC 5 V **E** DC 10 - 30 V	**S.41 Synchro, IP65, 6 mm**[7] **S.71 Synchro, IP67, 6 mm**[1] **K.42 Clamping IP65, 10 mm**[7] **K.46** Clamping, IP65, 9,52 mm[7] **K.47** Clamping, IP65, 12 mm[5,7] **K.4C** Clamping, IP65, 8 mm[7] **K.72 Clamping, IP67, 10 mm**[1] **K.76** Clamping, IP67, 9,52 mm[1] **K.7C** Clamping, IP67, 8 mm[1] **F.42 Spring tether, IP65, hub shaft 10 mm, mounting with clamping ring**[7] **F.46** Spring tether, IP65, hub shaft 9,52 mm, mounting with clamping ring[7] **F.47 Spring tether, IP65, hub shaft 12 mm, mounting with clamping ring**[7] **F.4E** Spring tether, IP65, hub shaft 12,7 mm, mounting with clamping ring **F.49** Spring tether, IP65, hub shaft 14 mm, mounting with clamping ring[7] **F.77** Spring tether, IP67, hub shaft 12 mm, mounting with clamping ring[1] **Q.42** Square, IP65, 10 mm [7] **Q.46** Square, IP65, 9,52 mm[7] **Q.72** Square, IP67, 10 mm[1] **Q.76** Square, IP67, 9,52 mm[1]	**SB** SSI Binary **SD** SSI Binary (+Sin/Cos 1Vss) **SR** SSI Binary+ high active PRESET **SG** SSI Gray **SC** SSI Gray (+Sin/Cos 1Vss) **SH** SSI Gray+ high active PRESET **SE** SSI Extended[2] **BI** BiSS-B **BC** BiSS-B (+Sin/Cos 1Vss) **BE** BiSS-C **BV** BiSS-C (+Sin/Cos 1Vss)	**A** Cable, axial, 1,5m[6] **B** Cable, radial, 1,5m[6] **C** M23 -connector, 12-pole, axial, cw[4] **D** M23 -connector, 12-pole, radial, cw[4] **G** M23 -connector, 12-pole, , axial, ccw[4] **H** M23 -connector, 12-pole, radial, ccw[4] **7** M12 -connector, 8-pole, axial[3] **8** M12 -connector, 8-pole, radial[3]

[1] Protection class IP67 not available in combination with Preset-Key and LED-display
[2] Alarm and/or Parity Bit at SSI Interface on request
[3] Interface SSI Binär/Gray +Sin/Cos 1Vss or BiSS-B/BiSS-C + Sin/Cos 1Vss: not available with connection 7 and 8 (M12)
[4] IP67 on cover with connector only if IP67 mating connector mounted properly
[5] on request
[6] For other cable lengths and connectors at the end of the cable, see in next table - these parts of code add to the ordering code of encoder.
[7] Protection class shaft input IP64 (according to EN 60529)

Absolute Encoder AC58 - SSI / BISS-B / BISS-C

ORDERING INFORMATION
Selection of cable length

The variants with a cable outlet (connection A or B) are also available with different cable lengths. To get your desired cable length and/or cable connector, please add the appropriate code to the end of the order key. Other cable lengths on request.

Code	Cable length		Code	Cable length+ connector
without Code	1,5 m		- D	1,5 m with M23 - connector,12-polig, ccw
- D0	3 m		-D0-D	3 m with M23 - connector,12-polig, ccw
- F0	5 m		-F0-D	5 m with M23 - connector,12-polig, ccw
- K0	10 m			
- P0	15 m		- I	1,5 m with M23 - connector,12-polig, cw
- U0	20 m		-D0-I	3 m with M23 - connector,12-polig, cw
- V0	25 m		-F0-I	5 m with M23 - connector,12-polig, cw
- W0	30 m			

Accessories

FELXIBE COUPLINGS

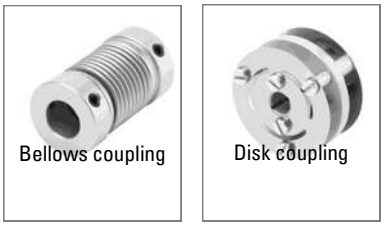
Bellows coupling

Disk coupling

Isolated disk coupling

Helical coupling

	Bore diameter d1/d2	Ordering code
Bellows coupling	6 mm / 6 mm	3 520 068
Bellows coupling	8 mm / 10 mm	3 520 077
Bellows coupling	10 mm / 10 mm	3 520 037
Disk coupling	6 mm / 6 mm	0 070 663
Isolated disk coupling	6 mm / 6 mm	3 520 081
Isolated disk coupling	6 mm / 10 mm	3 520 082
Isolated disk coupling	10 mm / 10 mm	3 520 088
Helical coupling 19/28	5 mm / 6 mm	3 520 035
Helical coupling 19/28	6 mm / 6 mm	0 070 653
Helical coupling 25/32	6 mm / 9,53 mm	3 520 052
Helical coupling 25/32	6 mm / 10 mm	3 520 066
Helical coupling 25/32	10 mm / 10 mm	3 520 074
Helical coupling 25/32	10 mm / 12 mm	3 520 065

CONNECTORS

Connector (socket) matching with encoder connector	Ordering code
M23, 12-pole, cw, mating connector C/D/-I	3 539 202

Connector (socket) matching with encoder connector	Ordering code
M23, 12-pole, ccw, mating connecor G/H/-D	3 539 229

CONNECTION CABLES
Not made up

Cable not made up with connectors	Ordering code + desired length
TPE cable for AC58 with SSI or BISS (12 core + screen)	3 280 220 + Length

TECHNICAL DATASHEET

Absolute Encoder AC58 - SSI / BISS-B / BISS-C

Accessories

MOUNTING

	Ordering code
Clamping eccentric, For M4 (set of three)	1 522 300
Fastening angle (plastic), for clamping flange RI 58, AC 58 (fastening material included)	1 522 329
Torque support	1 531 188
Mounting bell (plastic), for synchro flange RI 58, AC 58 (clamping eccentric and fastening material included)	1 522 330
Square flange adapter 58 x 58 mm, for clamping flange RI 58, AC 58 (fastening material included)	1 522 326
Square flange adapter 80 x 80 mm, for clamping flange RI 58, AC 58 (fastening material included)	1 522 327
Synchro flange adapter , for clamping flange RI 58, AC 58 (fastening material included)	1 522 328
Clamping eccentric for synchro flange, d6,5 for M3 (set of three)	0 070 655

CONNECTING CABLES

Connecting cables with plug (socket) on one end	Ordering code
M12, 8 pole, PUR cable, mating connector for connection 7/8, 3 m	1 565 329
M12, 8 pole, PUR cable, mating connector for connection 7/8, 5 m	1 565 330
M12, 8 pole, PUR cable, mating connector for connection 7/8, 10 m	1 565 331
M23, 12 pole, TPE cable, cw, mating connector for connection C/D, 3 m	1 542 003
M23, 12 pole, TPE cable, cw, mating connector for connection C/D, 5 m	1 542 004
M23, 12 pole, TPE cable, cw, mating connector for connection C/D, 10 m	1 542 005
M23, 12 pole, TPE cable, cw, mating connector for connection C/D, 15 m	1 542 006
M23, 12 pole, TPE cable, cw, mating connector for connection C/D, 20 m	1 542 007
M23, 12 pole, TPE cable, cw, mating connector for connection C/D, 25 m	1 542 008
M23, 12 pole, TPE cable, cw, mating connector for connection C/D, 30 m	1 542 009
M23, 12 pole, TPE cable, cw, mating connector for connection C/D, 40 m	1 542 026
M23, 12 pole, TPE cable, cw, mating connector for connection C/D, 50 m	1 542 027
M23, 12 pole, TPE cable, ccw, mating connector for connection G/H, 3 m	1 542 010
M23, 12 pole, TPE cable, ccw, mating connector for connection G/H, 5 m	1 542 011
M23, 12 pole, TPE cable, ccw, mating connector for connection G/H, 10 m	1 542 012
M23, 12 pole, TPE cable, ccw, mating connector for connection G/H, 15 m	1 542 013
M23, 12 pole, TPE cable, ccw, mating connector for connection G/H, 20 m	1 542 014
M23, 12 pole, TPE cable, ccw, mating connector for connection G/H, 25 m	1 542 015
M23, 12 pole, TPE cable, ccw, mating connector for connection G/H, 30 m	1 542 016
M23, 12 pole, TPE cable, ccw, mating connector for connection G/H, 40 m	1 542 028
M23, 12 pole, TPE cable, ccw, mating connector for connection G/H, 50 m	1 542 029

Subject to errors and changes