Signal lamp TILTED DIAMOND+ IO-LINK, lamp RGB, 24 Volt, bezel transparent, M12 4-pin A-coded



fields of application

- Measurement-control-regulation
- Electrical engineering
- Mechanical and system engineering
- Signalling systems
- Vehicle construction
- Industrial robots
- Model construction

description

Our IO-LINK products offer you a comfortable start and can be quickly integrated into your existing environment by using standardized M12 connectors. Simply connected and individually parameterized, our control and signaling devices open up countless possibilities. With the IO-LINK versions of the TILTED DIAMOND+ and E-BOX you are already prepared by today for the challenges of tomorrow.

The ultra-bright signal lamp is quickly mounted and vibration resistant.

Assembly

Screw connection from below
Optional with mounting tube and foot

Parameterization

Night mode with different brightness level
Flexible color selection: 5 standard colors plus 3 freely selectable RGB colors
8 different flashing modes
Can be diagnosed via the control

More information: **rafi.de/en/io-link/**

Product video E-BOX IO-LINK: **youtube.com/watch**

Product video TILTED DIAMOND+ IO-LINK: **youtube.com/watch**

The information in this data sheet only contains general descriptions and / or performance features, which may not apply precisely as described to the respective application, and which my change due to further product enhancements. The technical data, illustrations and other information about our products are the mere results of individual technical testing. These descriptions and other product features are only binding if they expressly agreed upon at the time of the conclusion of a binding contract. In all other cases, we reserve the right to make technical changes as well as changes of availability. Pictures and other graphic illustrations are approximations only. All product names may be trademarks or brand names of the RAFI Group or any other sub-supplier of RAFI. The use of such by any third parties for their own purposes may infringe the rights of the respective entity holding those rights.

RAFI GmbH & Co. KG

Ravensburger Str. 128-134
88276 Berg / Ravensburg
Germany
www.rafi-group.com,
info.headquarters@rafi-group.com

technical data

general

Color	black
Bezel color	transparent
Property of bezel / mushroom	transparent
Luminous element color	RGB
Bezel shape	convex
Collar shape	round
Operating temperature, min.	-30 °C
Operating temperature, max.	60 °C
Storage temperature, min.	-40 °C
Storage temperature, max.	85 °C
illuminated	Yes
Luminous elements	LED
Packaging	Box
Packaging unit	1 pcs.
net weight	61.2 g
Degree of protection, front side, according to DIN EN 60529	IP66 IP67
Degree of protection, rear side, according to DIN EN 60529	IP65
Impact resistance IK	08 side 08 frontal
MOQ order	1 pcs.
EMC	DIN EN 61000-6-2 Interference immunity industry DIN EN 61000-6-3 Interference emission living area DIN EN 61131-9 Single-drop digital communication interface (SDCI)
IO-Link version	Interface and System Specification 1.1.2
communication mode IO-Link	COM2 / 38,4 kBaud
cycle time	5 ms
Firmware Update	Yes over IO-Link Master
Pollution degree acc. to DIN EN 61010-1	Pollution degree 2
RoHS compliant	Yes
REACH compliant	Yes

mounting diameters

Outside dimension, length	56.8 mm
Outside dimension, width	56.8 mm
Outside dimension, height	84.6 mm
Mounting depth	14.5 mm
Installation height	70.1 mm
Collar dimension	56.8 mm

mechanical data

Fixing	Screw
Terminal on the rear	M12 4-pin A-coded

direct links

RAFI eCatalog

The information in this data sheet only contains general descriptions and / or performance features, which may not apply precisely as described to the respective application, and which my change due to further product enhancements. The technical data, illustrations and other information about our products are the mere results of individual technical testing. These descriptions and other product features are only binding if they expressly agreed upon at the time of the conclusion of a binding contract. In all other cases, we reserve the right to make technical changes as well as changes of availability. Pictures and other graphic illustrations are approximations only. All product names may be trademarks or brand names of the RAFI Group or any other sub-supplier of RAFI. The use of such by any third parties for their own purposes may infringe the rights of the respective entity holding those rights.

RAFI GmbH & Co. KG

Ravensburger Str. 128-134
88276 Berg / Ravensburg
Germany
www.rafi-group.com,
info.headquarters@rafi-group.com

PIN 1	L+
PIN 2	-
PIN 3	L-
PIN 4	C/Q

electrical data

Operating voltage, min.	19.2 V
Operating voltage, max.	28.8 V
Rated operating voltage	24 V
Operating current, max.	120 mA

The information in this data sheet only contains general descriptions and / or performance features, which may not apply precisely as described to the respective application, and which my change due to further product enhancements. The technical data, illustrations and other information about our products are the mere results of individual technical testing. These descriptions and other product features are only binding if they expressly agreed upon at the time of the conclusion of a binding contract. In all other cases, we reserve the right to make technical changes as well as changes of availability. Pictures and other graphic illustrations are approximations only. All product names may be trademarks or brand names of the RAFI Group or any other sub-supplier of RAFI. The use of such by any third parties for their own purposes may infringe the rights of the respective entity holding those rights.

RAFI GmbH & Co. KG

Ravensburger Str. 128-134
88276 Berg / Ravensburg
Germany
www.rafi-group.com,
info.headquarters@rafi-group.com

drawings

Dimensioned drawing

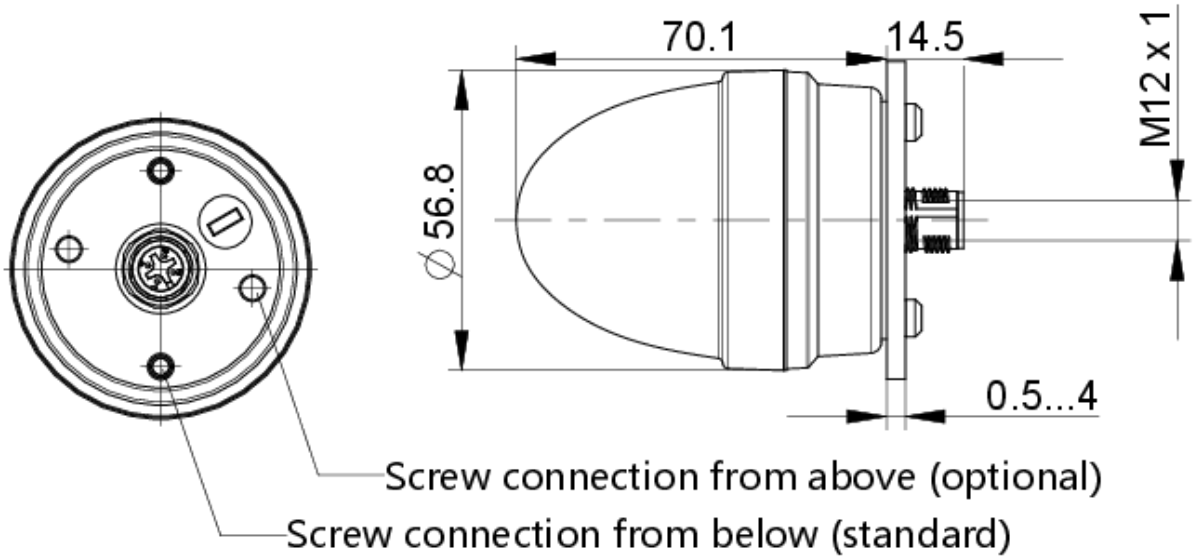

System drawing

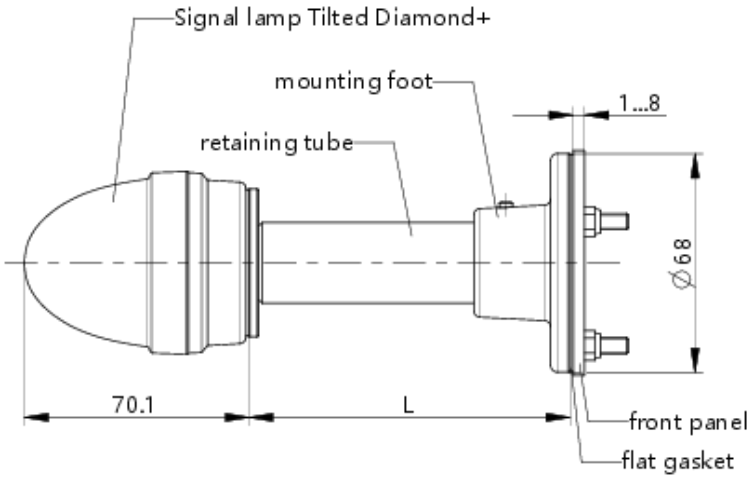

The information in this data sheet only contains general descriptions and / or performance features, which may not apply precisely as described to the respective application, and which my change due to further product enhancements. The technical data, illustrations and other information about our products are the mere results of individual technical testing. These descriptions and other product features are only binding if they expressly agreed upon at the time of the conclusion of a binding contract. In all other cases, we reserve the right to make technical changes as well as changes of availability. Pictures and other graphic illustrations are approximations only. All product names may be trademarks or brand names of the RAFI Group or any other sub-supplier of RAFI. The use of such by any third parties for their own purposes may infringe the rights of the respective entity holding those rights.

RAFI GmbH & Co. KG

Ravensburger Str. 128-134
88276 Berg / Ravensburg
Germany
www.rafi-group.com,
info.headquarters@rafi-group.com

Mounting hole drawing

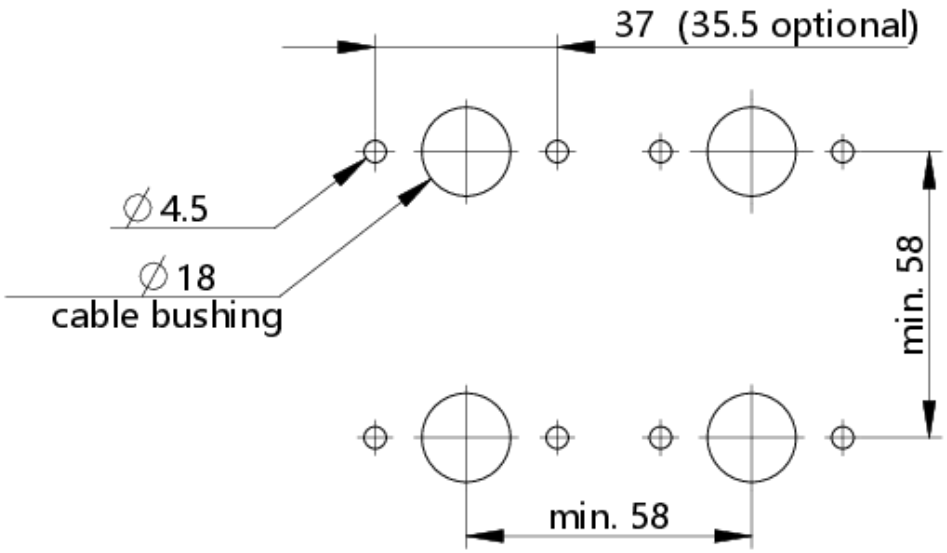

Connection drawing

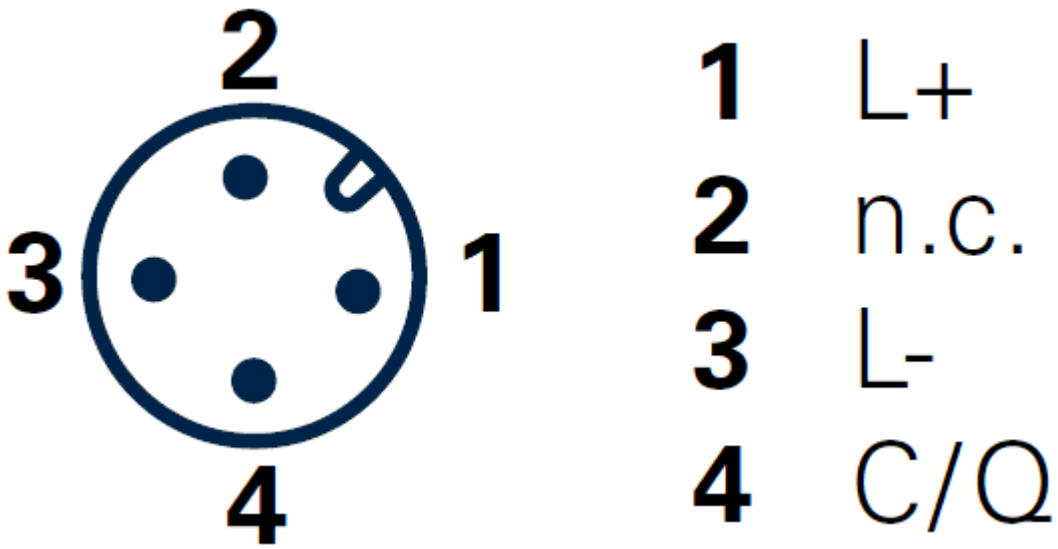

The information in this data sheet only contains general descriptions and / or performance features, which may not apply precisely as described to the respective application, and which my change due to further product enhancements. The technical data, illustrations and other information about our products are the mere results of individual technical testing. These descriptions and other product features are only binding if they expressly agreed upon at the time of the conclusion of a binding contract. In all other cases, we reserve the right to make technical changes as well as changes of availability. Pictures and other graphic illustrations are approximations only. All product names may be trademarks or brand names of the RAFI Group or any other sub-supplier of RAFI. The use of such by any third parties for their own purposes may infringe the rights of the respective entity holding those rights.

RAFI GmbH & Co. KG

Ravensburger Str. 128-134
88276 Berg / Ravensburg
Germany
www.rafi-group.com,
info.headquarters@rafi-group.com