Your Expert Partner for **Human Machine Interfaces**

Blind plug

Distribution by
Rs-online

61-9453.0



https://rs-online.eao.com/component/61-9453.0...

Your product:



61-9453.0
Blind plug

FRONT

Colour: Black

MOUNTING

Mounting cut-out: Ø 22.5 mm

MECHANICAL CHARACTERISTICS

Weight: 0.006 kg

OTHER

Short Description: Blind plug, Ø 25 mm, Ø 22.5 mm, Plastic, Black

Titel Accessory: Blind plug

Dimension: Ø 25 mm

Material: Plastic

Hints: Please note that bigger minimum distances are necessary
Only for mounting in round hole without D-shape (Part No. 61-9453.0)

Mounting cut-outs:

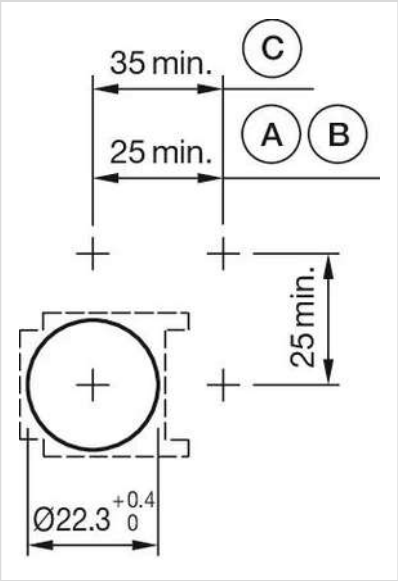

A = Solder/Plug-in terminal 2.8 mm x 0.5 mm
B = Solder terminal
C = Screw terminal

Dimension drawings:

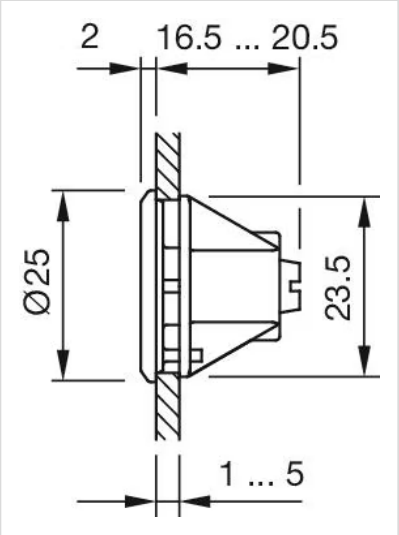

for Part No. 61-9453.0