SPO Spring Toggle for use in Plasterboard

Self-acting anchor







Product information

Features and benefits

- Long screw of the toggle fixing allows use in boards of various thicknesses and with thick attachements, offering maximum flexibility.
- Wide transition beams ensure a good load distribution allowing high load-bearing capacity
- Allows easy installation for fastenings behind thick panels in very flat cavities.
- Self-acting anchor with easy installation.
- Suitable for overhead applications

Applications

- Light shelving
- Brackets, grips and hooks
- Paintings
- Lamps
- Lighting
- Mirrors
- Shelves
- Other decorative elements

Base materials

Suitable for use in

- Plasterboard
- Chipboard
- Oriented Strand Board
- PVC Profile

Installation guide

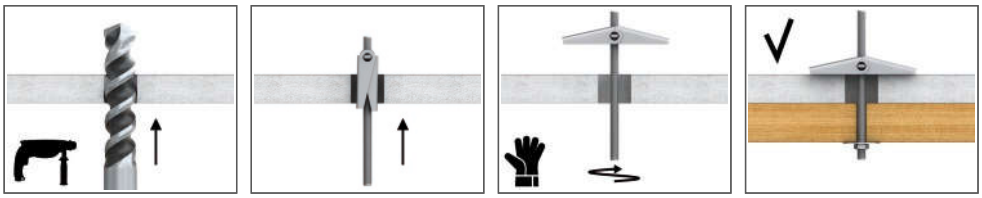

1. Drill a hole of the required diameter.
2. Compress the 'wings' and push the fixing into the hole.
3. While tightening the screw, pull the fixture out from the wall or ceiling to prevent the 'wings' spinning freely.

Product information

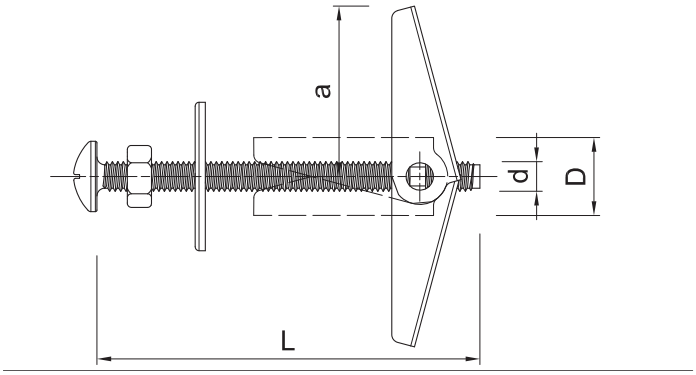

Product Code	Screw type	Plug		Screw		Fixture
		Diameter	Radius	Diameter	Length	Hole diameter
		D	a	d	L	d_f
		[mm]				
R-SPO450	pan head metric screw	12	25	4	50	14
R-SPO-03050	metric screw	10	20	3	50	12
R-SPO-05050	metric screw	12	25	5	50	14
R-SPO-05080	metric screw	14	25	5	80	14
R-SPO-06060	metric screw	18	30	6	60	18
R-SPO-06080	metric screw	18	30	6	80	18

Installation data

Substrate			Plasterboard min. 12.5
Fixing diameter	d	[mm]	4
Board thickness	t_{fix}	[mm]	9,5
Hole diameter in substrate	d_0	[mm]	14
Min. installation depth	h_{nom}	[mm]	9.5
Min. substrate thickness	h_{min}	[mm]	9.5
Min. spacing	s_{min}	[mm]	100
Min. edge distance	c_{min}	[mm]	100

Basic performance data

Performance data for single anchor without influence of edge distance and spacing

Substrate		Plasterboard min. 9.5 mm	Plasterboard min. 12.5 mm
MEAN ULTIMATE LOAD $F_{Ru,m}$			
SPO450	[kN]	0.55	0.56
CHARACTERISTIC LOAD F_{Rk}			
SPO450	[kN]	0.36	0.46
DESIGN LOAD F_{Rd}			
SPO450	[kN]	0.17	0.22
RECOMMENDED LOAD F_{rec}			
SPO450	[kN]	0.12	0.16

Product commercial data

Product Code	Screw	Quantity [pcs]			Weight [kg]			Bar Codes
	Length [mm]	Box	Outer	Pallet	Box	Outer	Pallet	
R-SPO450	50	50	800	19200	0.66	10.6	284.8	5906675172743
R-SPO-03050	50	100	1600	38400	0.53	8.6	235.3	5010445944307
R-SPO-05050	50	100	1600	38400	1.35	21.6	549.0	5906675206950
R-SPO-05080	80	100	1200	28800	1.72	20.6	524.5	5010445944390
R-SPO-06060	60	50	800	19200	1.19	19.0	485.7	5010445944420
R-SPO-06080	80	50	800	19200	1.30	20.8	528.4	5010445944451