Description



- Panel mount plug for power transmission, M12 screw connection, 5-pole, L-coding
- Front/screw mounting with M16 thread, 0.5m conductors, 5 x 14AWG

General characteristics

Design	Panel mount plug M12
Connection	Screw connection
Coding	L-Coding
Number of poles	5-pole (4+FE)
Product standard	DIN EN 61076-2-111
Protection class	IP 67
Temperature rating (operation)	-25 up to +85 °C (-13 up to +185 °F)
Mating cycles	≥ 100
Tightening torque, connector	0.4 up to 0.6 Nm
Tightening torque, locknut	3 up to 4 Nm

Electrical properties, connector

Rating voltage	63 V
Rating current	16 A
Overvoltage category	II
Pollution degree	3
Insulation resistance	≥ 100 MΩ
Contact resistance of connector	≤ 5 mΩ

Materials, connector

Contacts	Brass, gold plated
Contact holder	TPU GF
Connector shell	Brass, nickel plated
Locknut	Brass, nickel plated
Inner overmold	Epoxide resin
Seal	FPM/FKM

Single cores

AWM style	1015
Material of conductor	Stranded copper wire, stripped section tinned
Material of core insulation	PVC
Conductor cross-section	14AWG
Color of cores	Brown (BN), White (WH), Blue (BU), Black (BK), Grey (GY)

We reserve all rights according to DIN ISO 16016.

Technical drawings

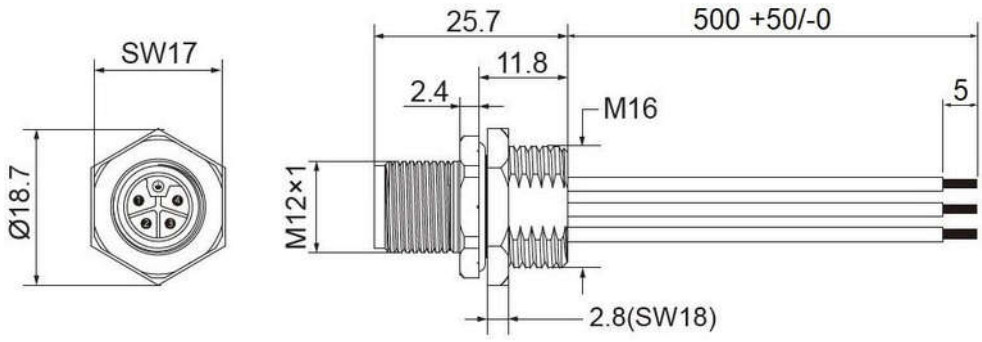

Pin diagram

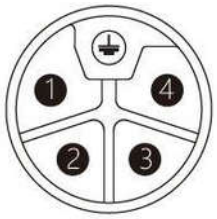

Wire list

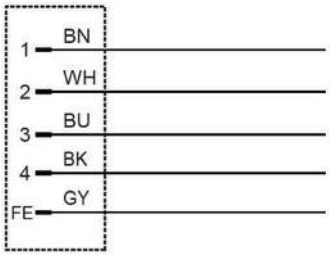

Panel cut-out

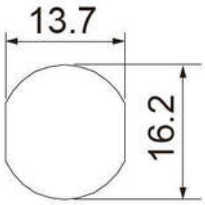

Maximum wall thickness is 7 mm

Application range

Connection of enclosures and cabinets.

Note

The photographs are not to scale and are not detailed images of the respective products.

We reserve all rights according to DIN ISO 16016.