# OMEGA COUPLING
# INSTALLATION INSTRUCTIONS

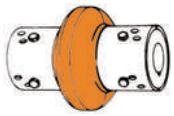

**WARNING**

- Because of the possible danger to person(s) or property from accidents which may result from improper use or installation of products, it is extremely important to follow the proper selection, installation, maintenance and operational procedures.
- All rotating power transmission products are potentially dangerous and can cause serious injury. They must be properly guarded in compliance with OSHA and A.N.S.I.standards for the speeds and applications in which they are used. It is the responsibility of the user to provide proper guarding.
- Failure to secure capscrews properly could cause coupling component(s) to become dislodged during operation; resulting in personal injury. Both “Inch” and “Metric” capscrew/hub designs are in service worldwide. Do not attempt to install “Inch” capscrews into a “Metric” hub or visa versa.
- Do not start motor or jog without the complete coupling being properly secured to driver and driven equipment shafts.
- Do not use on turbine drives if the coupling cannot be protected from steam leakage or from speeds in excess of the couplings published speed ratings.
- Do not use on applications such as elevators, man lifts, or devises that transfer people. When the coupling fails, the lift device or people mover could fall resulting in serious injury or death.
- Before installing this coupling on any system containing sleeve bearings, herringbone gear sets or other devices sensitive to axial thrust, consult Rexnord.
- It is the responsibility of the user to consider the coupling's stiffness (available from Rexnord) as it relates to the drive system frequency.

*STEP 1*



Inspect both driving and driven shafts and hub bores making sure they are free from dirt and burrs. Be sure they keys fit shafts properly. Mount both hubs to the shafts securing only one hub; the other hub should be loose for minor adjustment of spacing. Where tapered bushings are used, follow bushing manufacturer's instructions. If hub is bored for an interference fit, we recommend heating the hub in water, oil bath or an oven and quickly positioning it on the shaft. Do not spot heat hub as it may cause distortion.

*STEP 2*

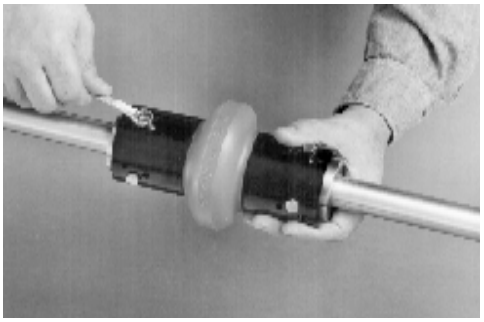

Place half of the elastomer element around hubs and secure with self-locking capscrews. The elastomer element will space the other hub. It is important to have capscrew properly tightened. See Table 1 below for recommended capscrew torques and instructions. Now secure the other hub to the shaft.

*STEP 3*

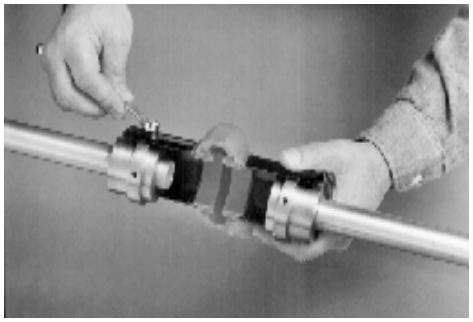

Mount other half of the elastomer element to hubs. Be sure to secure rings to the spacer element if provided. Tighten all capscrews to the recommended capscrew torques in Table 1 and your done!

Spacer coupling installation is shown; the same procedure applies for the standard design coupling.

HELPFUL HINT: If the capscrew holes in the element do not line up properly with the hubs due to equipment misalignment, rotate the shafts (if possible) slightly as you install each capscrew. On larger coupling sizes, first install the capscrews that are located in the center of the half element.

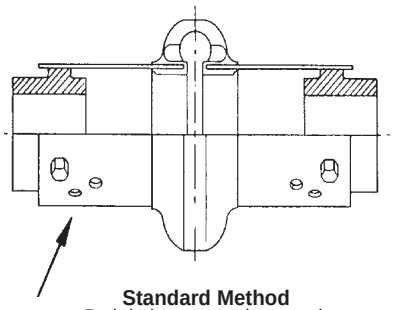

**Standard Method**
Both hubs mounted outward.

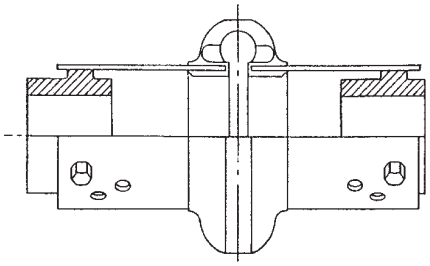

**Optional Method**
One hub mounted inward; one hub mounted outward.

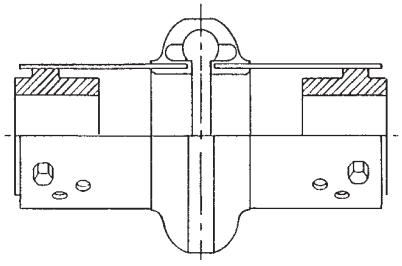

**Optional Method**
Both hubs mounted inward.

Additional mounting positions are possible with the optional assembly holes on the spacer element. Select the combination which most closely matches the dimension desired between shaft ends.

## ALLOWABLE SHAFT ENGAGEMENTS

Shafts can be flush with the hub (not shown), recessed below the face of the hub, or extended beyond the hub face.

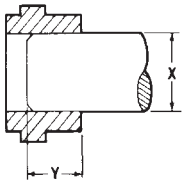


Dimension Y should be equal to, or greater than, .8 times dimension X. 100% shaft engagement is recomended for compression bushed hubs.

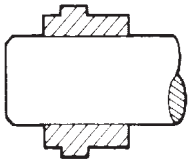

The shaft may extend beyond the hub, as long as there is sufficient keyway length available.

**TABLE 1**

| RECOMMENDED CAPSCREW TORQUES FOR PROPER INSTALLATION | CPLG SIZE | TORQUE - DRY IN. LBS. | FT. LBS. | Nm |
|---|---|---|---|---|
| **- IMPORTANT -** Capscrews have self-locking patches which should *not* be reused more than twice. Capscrews can be further used with application of a thread-locking adhesive. *Do Not Lubricate Capscrew Threads* | 2<br>3<br>4<br>5<br>10 | 204 | 17 | 23 |
| | 20<br>30<br>40<br>50 | 360 | 30 | 40 |
| | 60<br>70<br>80 | 900 | 75 | 100 |
| | 100<br>120 | 3240 | 270 | 370 |
| | 140 | 7080 | 590 | 800 |

# EQUIPMENT ALIGNMENT

*Coupling alignment is directly related to equipment and coupling life.*

Although Omega couplings can withstand gross misalignment, care should be taken for best possible alignment to assure optimum performance. The caliper/straightedge alignment procedure is described below. If greater alignment accuracy is desired, a dial indicator method is recommended. There are occasions when equipment manufacturers require more specific alignment tolerances, in which case, the manufacturer's recommendations should be followed.

1. To correct for angular misalignment, use calipers to check the gap between hubs. Adjust or shim equipment until the gap is the same at all points around the hubs.
2. To correct parallel offset, place a straightedge across the hub flanges in two places at 90° to each other. Adjust or shim equipment until the straightedge lays flat on both sides.
3. Tighten down connected equipment and recheck alignment.
4. Install elastomer element, tightening all capscrews to the values shown in Table 1 as described on the reverse side.
5. If practical, recheck and tighten capscrews after several hours of operation.

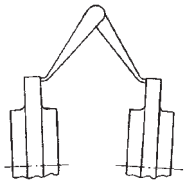

ADJUST FOR ANGULAR MISALIGNMENT

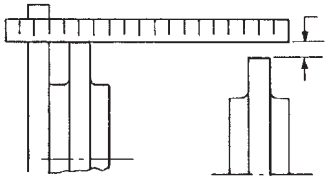

PARALLEL OFFSET

ADJUST FOR PARALLEL OFFSET

## DIMENSIONS AND PART NUMBERS

*Factory Part Numbers*

| FLEXIBLE ELEMENT | | | CAPSCREWS* | | | |
|---|---|---|---|---|---|---|
| Size | Spacer | Standard | Carbon Steel | Stainless Steel | Size-in | Qty |
| 2 | 7300075 | 7300005 | 7300910 | 7300938 | 1/4-20 x 3/8 | 8 + 8** |
| 3 | 7300080 | 7300010 | 7300912 | 7300940 | 1/4-20 x 1/2 | 8 + 8** |
| 4 | 7300085 | 7300015 | | | | 8 + 8** |
| 5 | 7300090 | 7300020 | | | | 8 + 8** |
| 10 | 7300095 | 7300025 | 7300918 | 7300946 | | 12 + 12** |
| 20 | 7300100 | 7300030 | 7300920 | 7300948 | 3/8-16 x 5/8 | 12 |
| 30 | 7300105 | 7300035 | | | | 12 |
| 40 | 7300110 | 7300040 | 7300924 | 7300952 | | 16 |
| 50 | 7300115 | 7300045 | | | | 16 |
| 60 | 7300120 | 7300050 | 7300928 | 7300956 | 1/2-13 x 7/8 | 16 |
| 70 | 7300125 | 7300055 | | | | 16 |
| 80 | 7300130 | 7300060 | | | | 16 |
| 100 | – | 7300065 | 7300934 | 7300965 | 3/4-10 x 1-1/2 | 20 |
| 120 | – | 7300070 | 7300936 | 7300967 | | 24 |
| 140 | – | 7300071 | 7385753 | 7385702 | 1.0-8 x 1-1/2 | 32 |

* Capscrews have self-locking patches which should not be lubricated or reused more than twice

* * Extra capscrews provided for spacer couplings with rings.

*Hubs**

| | Rough Bore | | Stock Bore (Part & Ranges) | | Taper-Lock® Hubs | | Taper-Lock® | Q.D. Hubs | Q.D. Bushing † | Standard Sleeve Ext. |
|---|---|---|---|---|---|---|---|---|---|---|
| Size | STD †† | Steel | STD †† | Steel | Iron | Steel | Bushing † | Steel | | Steel |
| 2 | 7300215 | 7369822 | 7300220-7300235 | - | - | - | - | - | - | - |
| 3 | 7300240 | 7369823 | 00245-00265 | - | - | 7300730 | 731008 | - | - | - |
| 4 | 7300270 | 7369824 | 00275-00300 | - | 7300800 | 7300740 | 731008 | 7300860 | JA | 7369575 |
| 5 | 7300305 | 7369825 | 00310-00335 | - | 7300805 | 7300745 | 731108 | 7300865 | SH | 7369576 |
| 10 | 7300340 | 7369826 | 00345-00370 | - | 7300810 | 7300750 | 731310 | 7300870 | SDS | 7369577 |
| 20 | 7300650 | 7300375 | 00651-00659 | 7300380-7300400 | 7300815 | 7300755 | 731610 | 7300875 | SK | 7369578 |
| 30 | 7300660 | 7300405 | 00661-00668 | 7300408-7300425 | 7300820 | 7300760 | 732012 | 7300880 | SF | 7369579 |
| 40 | 7300670 | 7300430 | 00669-00679 | 7300431-7300455 | 7300825 | 7300765 | 732517 | 7300885 | E | 7369580 |
| 50 | 7300680 | 7300460 | 00681-00686 | 7300461-7300470 | 7300830 | 7300770 | 732517 | 7300890 | E | 7369581 |
| 60 | 7300690 | 7300475 | 00692-00698 | 7300480-7300495 | 7300835 | 7300775 | 733020 | 7300895 | F | 7369582 |
| 70 | 7300700 | 7300500 | - | - | 7300840 | 7300780 | 733535 | 7300900 | J | 7369583 |
| 80 | 7300710 | 7300525 | - | - | 7300845 | 7300785 | 734040 | 7300905 | M | 7369584 |
| 100 | 7300720 | 7300550 | - | - | 7300850 | * * | 734545 | * * | M | 7369834 |
| 120 | 7300725 | 7300575 | - | - | 7300855 | * * | 735050 | * * | N | 7369835 |
| 140 | 7300727 | 7300580 | - | - | 7300857 | * * | 737060 | 7300908*** | P | - |

* Hubs are interchangeable for both the spacer and the standard coupling.

* * Consult Factory

* * * Iron

† Not supplied by Rexnord.

†† Standard hub material specifications: High strength sintered steel (Sizes #2 - #10), and Cast iron (Sizes #20 and above).

### REX OMEGA STANDARD COUPLING

NOTE: A urethane slit on the inside of the element is the result of our quality control bond testing and is not a material defect.

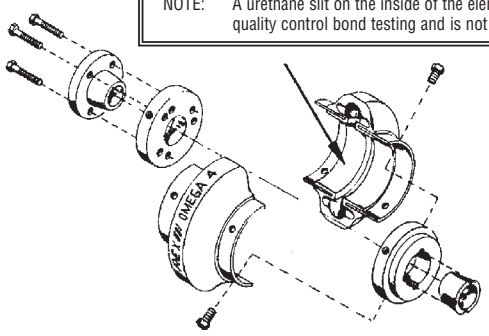

### REX OMEGA SPACER COUPLING

High speed rings are standard for spacer sizes #2-#10; optional for sizes #20-#80

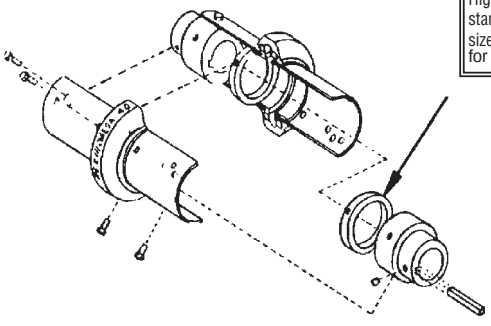

NOTE: Omega hubs are interchangeable with either standard or spacer flex elements; i.e., taper bushed hubs can be used with spacer elements and finished straight bore hubs can be used with standard elements.

ELEMENT REPLACEMENT: If element replacement is required, it is important to change both half elements, never replace just one half element. This is important because the element stiffness properties may change over time, and elements are packaged in weight matched pairs for better balance on high speed applications.

® Taper-Lock® is a registered trademark of Reliance Electric Company

BULLETIN No. 80152 12/01 40M

Rexnord

*Elastomer Products Operation*
*5555 S Moorland Road, New Berlin, WI 53151*
*Phone: 262-796-4060 FAX: 262-796-4064*