HF10FH MINIATURE HIGH POWER RELAY

c UL us
File No.:134517



Features

- 10A switching capability
- Long endurance
- Industry standard 8 or 11 round terminals
- Sockets available
- With push button
- Smoke cover type available
- Environmental friendly product (RoHS compliant)
- Outline Dimensions: (35.5 x 35.5 x 55.3) mm

CONTACT DATA

Contact arrangement	2C, 3C
Contact resistance	100mΩ max.(at 1A 24VDC)
Contact material	$AgSnO_2$, AgCdO
Contact rating (Res. load)	2C: 10A 250VAC/30VDC 3C: (NO)10A 250VAC/30VDC (NC) 5A 250VAC/30VDC
Max. switching voltage	250VAC / 30VDC
Max. switching current	10A
Max. switching power	2500VA / 300W
Mechanical endurance	1 x 10^7 OPS
Electrical endurance	2Z type: 1 x 10^5OPS (10A 250VAC/30VDC, Resistive load, Room temp., 1s on 9s off) 3Z type: 1 x 10^5OPS (NO:10A 250VAC/30VDC; NC:5A 250VAC/30VDC Resistive load, Room temp., 1s on 9s off)

CHARACTERISTICS

Insulation resistance		500MΩ (at 500VDC)
Dielectric strength	Between coil & contacts	2500VAC 1min
	Between open contacts	2000VAC 1min
Operate time (at nomi. volt.)		30ms max.
Release time (at nomi. volt.)		30ms max.
Temperature rise (at nomi. volt.)		100K max.
Shock resistance	Functional	98m/s²
	Destructive	980m/s²
Vibration resistance		10Hz to 55Hz 1.5mm DA
Humidity		5% to 85% RH
Ambient temperature		-40°C to 55°C
Termination		Octal and Undecal Type Plug
Unit weight		Approx. 90g
Construction		Dust protected

Notes: 1) The data shown above are initial values.
2) UL insulation system: Class B.

COIL

Coil power	DC type: Approx. 1.5W; AC type: Approx. 2.7VA

COIL DATA at 23°C

Nominal Voltage VDC	Pick-up Voltage VDC max.	Drop-out Voltage VDC min.	Max. Voltage VDC*	Coil Resistance Ω
6	4.80	0.60	7.20	23.5 x (1±10%)
12	9.60	1.20	14.4	95 x (1±10%)
24	19.2	2.40	28.8	430 x (1±10%)
48	38.4	4.80	57.6	1630 x (1±10%)
60	48.0	6.00	72.0	1920 x (1±10%)
100	80.0	10.0	120	6800 x (1±10%)
110	88.0	11.0	132	7300 x (1±10%)

Nominal Voltage VAC	Pick-up Voltage VAC max.	Drop-out Voltage VAC min.	Max. Voltage VAC *	Coil Resistance Ω
6	4.80	1.80	7.20	3.9 x (1±10%)
12	9.60	3.60	14.4	16.9 x (1±10%)
24	19.2	7.20	28.8	70 x (1±10%)
48	38.4	14.4	57.6	315 x (1±10%)
110/120	88.0	36.0	132	1600 x (1±10%)
220/230	176	69.0	253	6800 x (1±10%)

Notes: * Maximum voltage refers to the maximum voltage which relay coil could endure in a short period of time.

SAFETY APPROVAL RATINGS

UL/CUL	10A 250VAC/30VDC 1/3HP 240VAC 1/3HP 120VAC 1/2HP 277VAC

Notes: 1) All values unspecified are at room temperature.
2) Only typical loads are listed above. Other load specifications can be available upon request.

ORDERING INFORMATION

	HF10FH /	012	A	-2Z	D	T	G	(XXX)
Type								
Coil voltage	**DC:** 6, 12, 24, 48, 60, 100, 110V **AC:** 6, 12, 24, 48, 110/120, 220/230V							
Coil voltage form	**A:** AC	**D:** DC						
Contact arrangement	**2Z:** 2 Form C **3Z:** 3 Form C **3Z-1:** 3 Form C (Different Wiring Diagram)							
LED	**D:** With LED	**Nil:** Without LED						
Contact material	**T:** $AgSnO_2$	**Nil:** AgCdO						
Contact plating	**G:** Gold plated	**Nil:** No gold plated						
Special code[1)]	**XXX:** Customer special requirement	**Nil:** Standard						

Notes: 1) The customer special requirement express as special code after evaluating by Hongfa.

OUTLINE DIMENSIONS, WIRING DIAGRAM AND PC BOARD LAYOUT

Unit: mm

Outline Dimensions

2 Form C

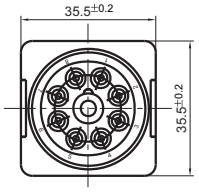

(Bottom view)

3 Form C

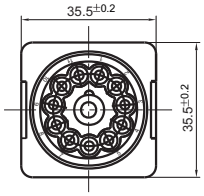

(Bottom view)

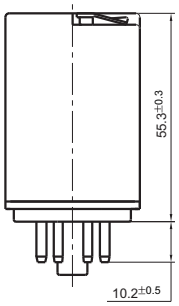

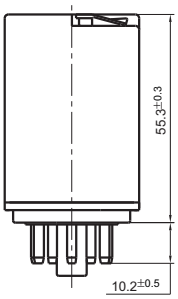

Wiring Diagram

(Bottom view)

2 Form C

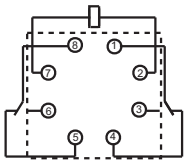

2 Form C (With LED)

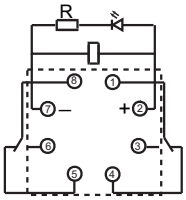

Remark: For AC parts with diode, the positive and negative pole markings on wiring diagram are not applicable.

3 Form C

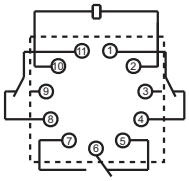

3 Form C (With LED)

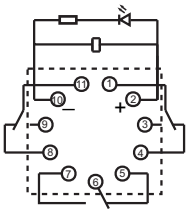

3 Form C (Different Wiring Diagram)

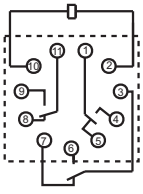

Remark: For AC parts with diode, the positive and negative pole markings on wiring diagram are not applicable.

Remark: 1) In case of no tolerance shown in outline dimension: outline dimension ≤1mm, tolerance should be ±0.2mm; outline dimension >1mm and ≤5mm, tolerance should be ±0.3mm; outline dimension >5mm, tolerance should be ±0.4mm.
2) The tolerance without indicating for PCB layout is always ±0.1mm.

CHARACTERISTIC CURVES

ENDURANCE CURVE

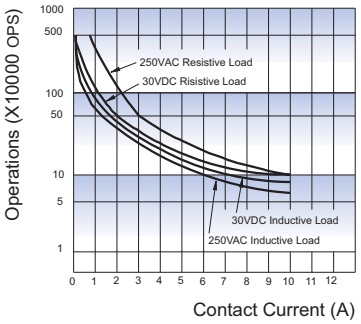

MAXIMUM SWITCHING POWER

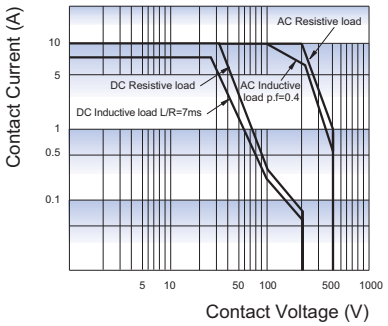

Test conditions:
Room temp., 1s on 9s off

Relay Sockets

c UL us
File No.: E253370



Features

- The dielectric strength can reach 2000VAC and the insulation resistance is 1000MΩ
- Two mounting types are available: screw mounting and DIN rail mounting.
- With finger protection device
- Many kinds of plug-in modules are available with the function of energizing indication and wiring protection.
- Components available: metallic retainer, plug-in modules
- Environmental friendly product (RoHS compliant)

CHARACTERISTICS

Type	Nominal Voltage	Nominal Current	Ambient Temperature	Dielectric Strength min.	Screw Torque	Wire Strip Length
10FF-2Z-C1	250VAC	10A	-40 ˚C to 70˚C	2000VAC	1.0N · m	7mm
10FF-2Z-C2	250VAC	10A	-40 ˚C to 70˚C	2000VAC	1.0N · m	7mm
10FF-2Z-C3	250VAC	10A	-40 ˚C to 70˚C	2000VAC	0.6N · m	7mm
10FF-2Z-C4	250VAC	10A	-40 ˚C to 70˚C	2000VAC	0.6N · m	7mm
10FF-3Z-C1	250VAC	10A	-40 ˚C to 70˚C	2000VAC	1.0N · m	7mm
10FF-3Z-C2	250VAC	10A	-40 ˚C to 70˚C	2000VAC	1.0N · m	7mm
10FF-3Z-C3	250VAC	10A	-40 ˚C to 70˚C	2000VAC	0.6N · m	7mm
10FF-3Z-C4	250VAC	10A	-40 ˚C to 70˚C	2000VAC	0.6N · m	7mm

OUTLINE DIMENSIONS, WIRING DIAGRAM AND PC BOARD LAYOUT

Unit: mm

Socket	Outline Dimensions	Wiring Diagram	PCB Layout	Components Available
10FF-2Z-C1  Screw terminal DIN rail or Screw mounting Without finger protection device Applicable for 2 poles	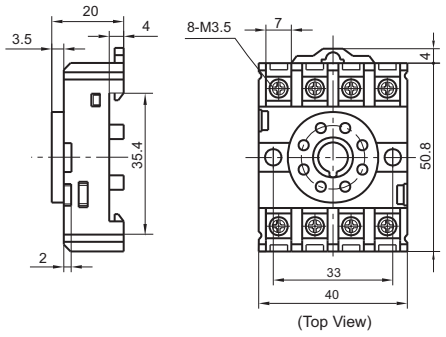 (Top View)	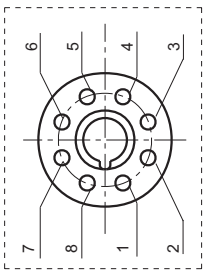 (Top View)	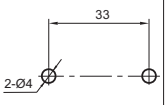	

OUTLINE DIMENSIONS, WIRING DIAGRAM AND PC BOARD LAYOUT

Unit: mm

Socket	Outline Dimensions	Wiring Diagram	PCB Layout	Components Available
10FF-2Z-C2  Screw terminal DIN rail or Screw mounting With finger protection device Applicable for 2 poles	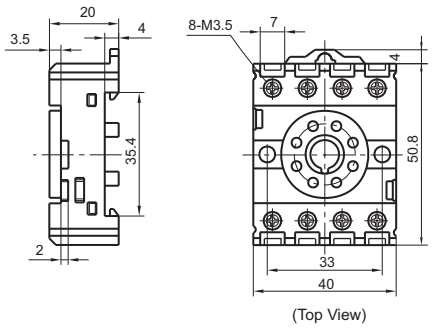 (Top View)	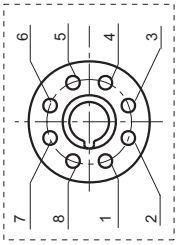 (Top View)	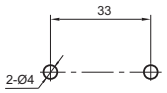	
10FF-2Z-C3  Screw terminal DIN rail or Screw mounting With finger protection device Applicable for 2 poles	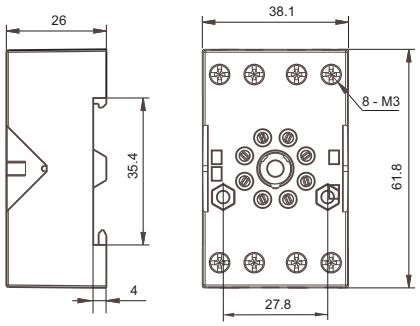 (Top View)	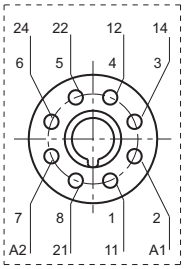 (Top View)	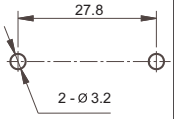	metallic retainer 10FF-H1
10FF-2Z-C4  Screw terminal DIN rail or Screw mounting With finger protection device Applicable for 2 poles	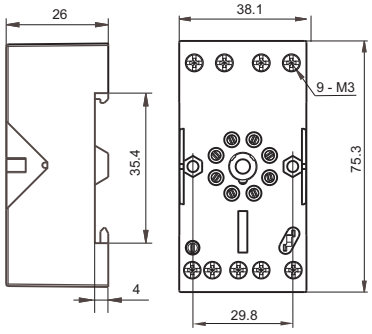 (Top View)	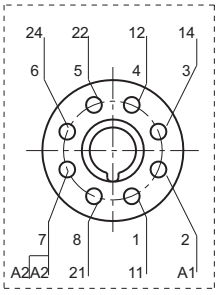 (Top View)	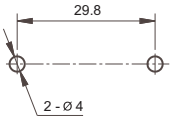	metallic retainer 10FF-H1 plug-in module HFFAA to HFFHU*
10FF-3Z-C1  Screw terminal DIN rail or Screw mounting Without finger protection device Applicable for 3 poles	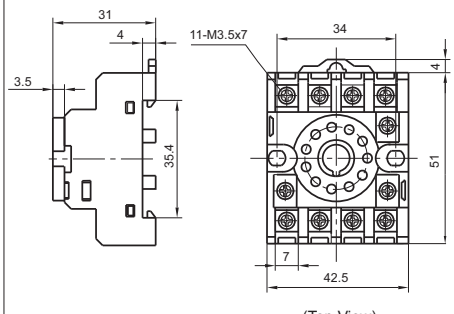 (Top View)	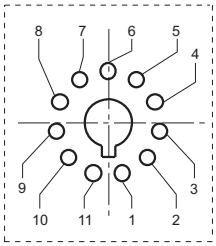 (Top View)	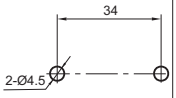	

OUTLINE DIMENSIONS, WIRING DIAGRAM AND PC BOARD LAYOUT

Unit: mm

Socket	Outline Dimensions	Wiring Diagram	PCB Layout	Components Available
10FF-3Z-C2  Screw terminal DIN rail or Screw mounting With finger protection device Applicable for 3 poles	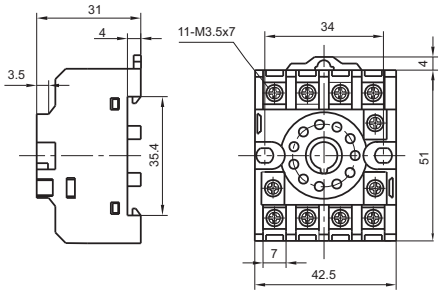 (Top View)	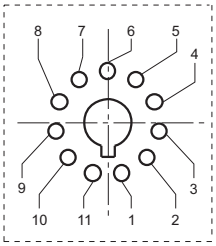 (Top View)	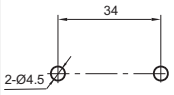	
10FF-3Z-C3  Screw terminal DIN rail or Screw mounting With finger protection device Applicable for 3 poles	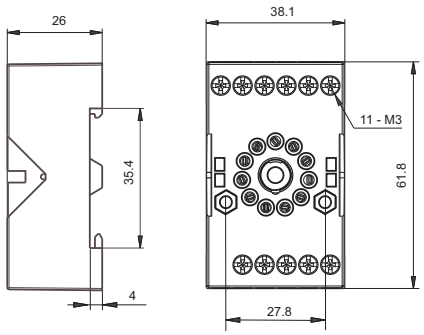 (Top View)	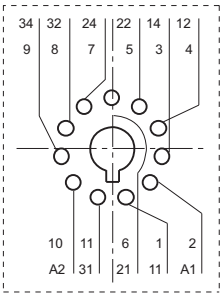 (Top View)	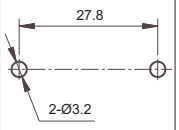	metallic retainer 10FF-H1
10FF-3Z-C4  Screw terminal DIN rail or Screw mounting With finger protection device Applicable for 3 poles	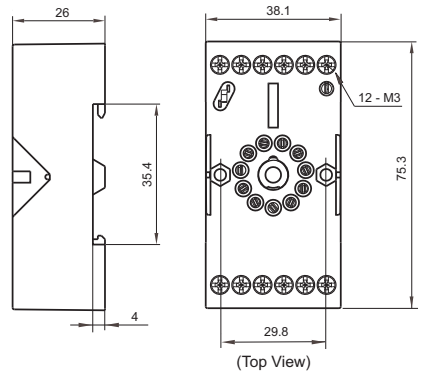 (Top View)	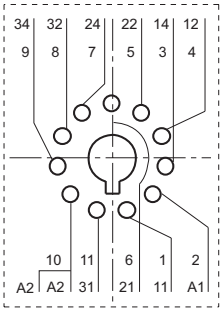 (Top View)	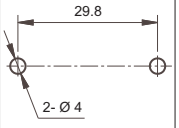	metallic retainer 10FF-H1 plug-in module HFFAA to HFFHU*

Notes: * Please refer to the product datasheet if plug-in module is required.

DIMENSION OF RELATED COMPONENT (AVAILABLE)

Unit: mm

Retainer

10FF-H1 (Metallic retainer)

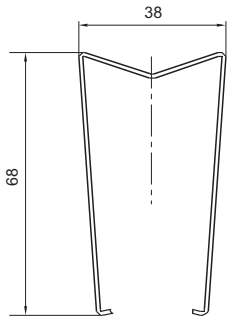

Things to be noticed when selecting sockets:

1. Please choose suitable relay socket according to the actual mounting environment, relay contact poles and terminal layout. If there is any query on selection, please contact Hongfa for the technical service.
2. As for related components, they should be selected separately. Please do give clear indication of the types of relay sockets and related components you choose while placing order.
3. The above is only an example of typical socket and related component type which is suitable to HF10FH relay. If you have any special requirements, please contact us.

Disclaimer

The specification is for reference only. See to "Terminology and Guidelines" for more information. Specifications subject to change without notice. We could not evaluate all the performance and all the parameters for every possible application. Thus the user should be in a right position to choose the suitable product for their own application. If there is any query, please contact Hongfa for the technical service. However, it is the user's responsibility to determine which product should be used only.

© Xiamen Hongfa Electroacoustic Co., Ltd. All rights of Hongfa are reserved.