

Image may differ from product. See specification for details.

SM 42 E-CS

Vibracon adjustable chocks, carbon steel

Carbon steel chocks (E-CS) are recommended for indoor use. They provide a cost-effective solution for standard applications, while offering reliable performance in environments such as on the factory floor. Applying additives at the mating surfaces provides initial protection – both before and during installation – and prevents parts from seizing when they are adjusted.

- A high load capacity
- A broad adjustment range
- An optimized load path through the product
- An optimized bolt/Vibracon combination
- Reduced chock height across the entire range

Overview

Dimensions

Bore diameter	52 mm
Outside diameter	190 mm
Height, nominal	66 mm

Properties

Pitch	2 mm
Material	Carbon steel
Application	Gas and diesel engines Compressors Electric motors Gearboxes Generators Pumps and fans Bearing housings Turbines Other critical rotating machinery

Logistics

Product net weight	9.9 kg
eClass code	23-05-20-01
UNSPSC code	20122410

Technical specification

Design	Standard
Material	Carbon steel
Colour	Metallic grey

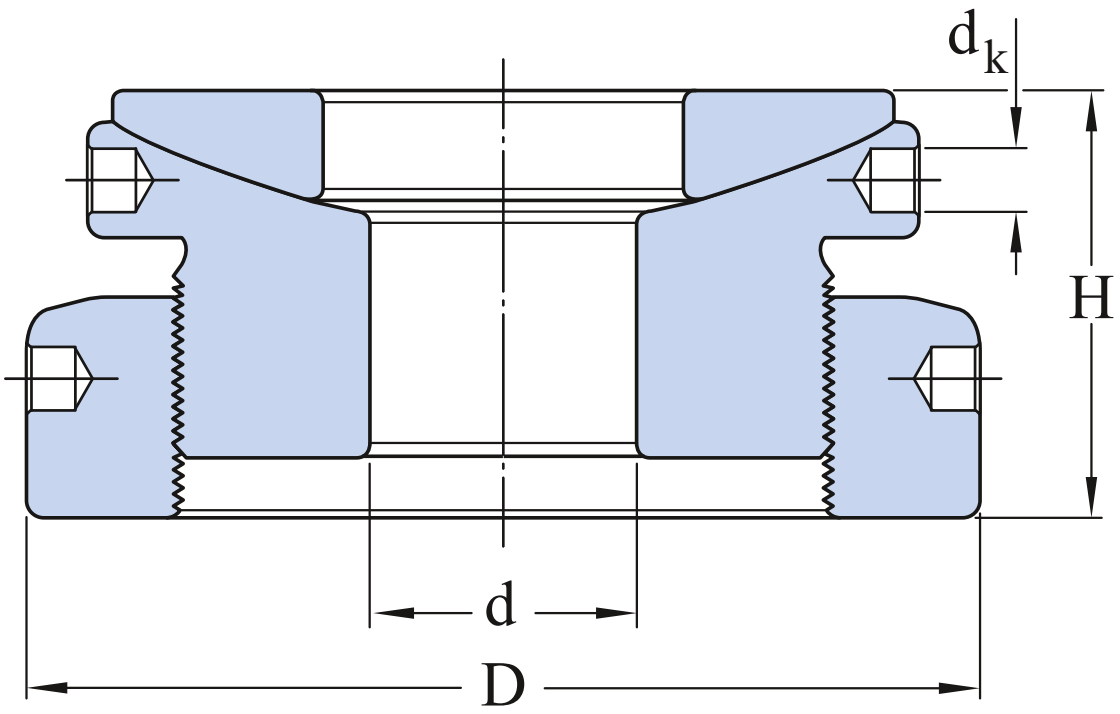

Dimensions

d	52 mm	Bore diameter
D	190 mm	Outside diameter
H	66 mm	Nominal height
H	min. 60 mm	Minimum height
H	max. 75 mm	Maximum height
d_k	8 mm	Key hole diameter

Calculation data

Proof load	850 kN
Machine load	160 kN

Mounting information

Bolt size (minimum), metric	M42
Bolt size (minimum), inch	1 3/4
Tightening torque for minimum bolt size	4 100 N·m
Bolt size (maximum), metric	M48
Bolt size (maximum), inch	2
Tightening torque for maximum bolt size	6 210 N·m

Compatible products

Recommended product

Vibracon adjustable chocks, surface treated	SM 42 E-CSTR
Vibracon adjustable chocks, stainless steel	SM 42 E-SS
Vibracon adjustable chocks, carbon steel	SM 36 E-CS
Spherical washer	SMSW 42 -ASTR
Spherical washer	SMSW 42LPAST
Spherical washer	SMSW 48 -ASTR

Recommended tool

Vibracon adjustment tool	SMAT 008
Wireless laser shaft alignment system	TKSA 41
Belt alignment, pulley side, red laser, 2 laser units with belt measurement accessories	TKBA 31

Terms of use

By accessing and using this website / app owned and published by AB SKF (publ.) (556007-3495 · Gothenburg) (“SKF”), you agree to the following terms and conditions:

Warranty Disclaimer and Limitation of Liability

Although every care has been taken to assure the accuracy of the information on this website / app, SKF provides this information "AS IS" and DISCLAIMS ALL WARRANTIES, EXPRESS OR IMPLIED, INCLUDING, BUT NOT LIMITED TO, IMPLIED WARRANTIES OF MERCHANTABILITY AND FITNESS FOR A PARTICULAR PURPOSE. You acknowledge that your use of this website / app is at your sole risk, that you assume full responsibility for all costs associated with use of this website / app, and that SKF shall not be liable for any direct, incidental, consequential, or indirect damages of any kind arising out of your access to, or use of the information or software made available on this website / app.

Any warranties and representations in this website / app for SKF products or services that you purchase or use will be subject to the agreed upon terms and conditions in the contract for such product or service.

Further, for non-SKF websites / apps that are referenced in our website / app or where a hyperlink appears, SKF makes no warranties concerning the accuracy or reliability of the information in these websites / apps and assumes no responsibility for material created or published by third parties contained therein. In addition, SKF does not warrant that this website / app or these other linked websites / apps are free from viruses or other harmful elements.

Third Party Services

When viewing YouTube content via the SKF website(s) (i.e. using YouTube API Services), you agree to be bound by the YouTube Terms of Service.

Copyright

Copyright in this website / app copyright of the information and software made available on this website / app rest with SKF or its licensors. All rights are reserved. All licensed material will reference the licensor that has granted SKF the right to use the material. The information and software made available on this website / app may not be reproduced, duplicated, copied, transferred, distributed, stored, modified, downloaded or otherwise exploited for any commercial use without the prior written approval of SKF. However, it may be reproduced, stored and downloaded for use by individuals without prior written approval of SKF. Under no circumstances may this information or software be supplied to third parties.

This website /app includes certain images used under license from Shutterstock, Inc.

Trademarks and Patents

All trademarks, brand names, and corporate logos displayed on the website / app are the property of SKF or its licensors, and may not be used in any way without prior written approval by SKF. All licensed trademarks published on this website / app reference the licensor that has granted SKF the right to use the trademark. Access to this website / app does not grant to the user any license under any patents owned by or licensed to SKF.

Changes

SKF reserves the right to make changes or additions to this website / app at any time.