LT8024

Electronic level and temperature sensor

LT0728B-B-00KSPKG/US

For 8-pole sockets the core colours are not standardised.
Please note the wiring of the sensor and the sockets (see data sheet).

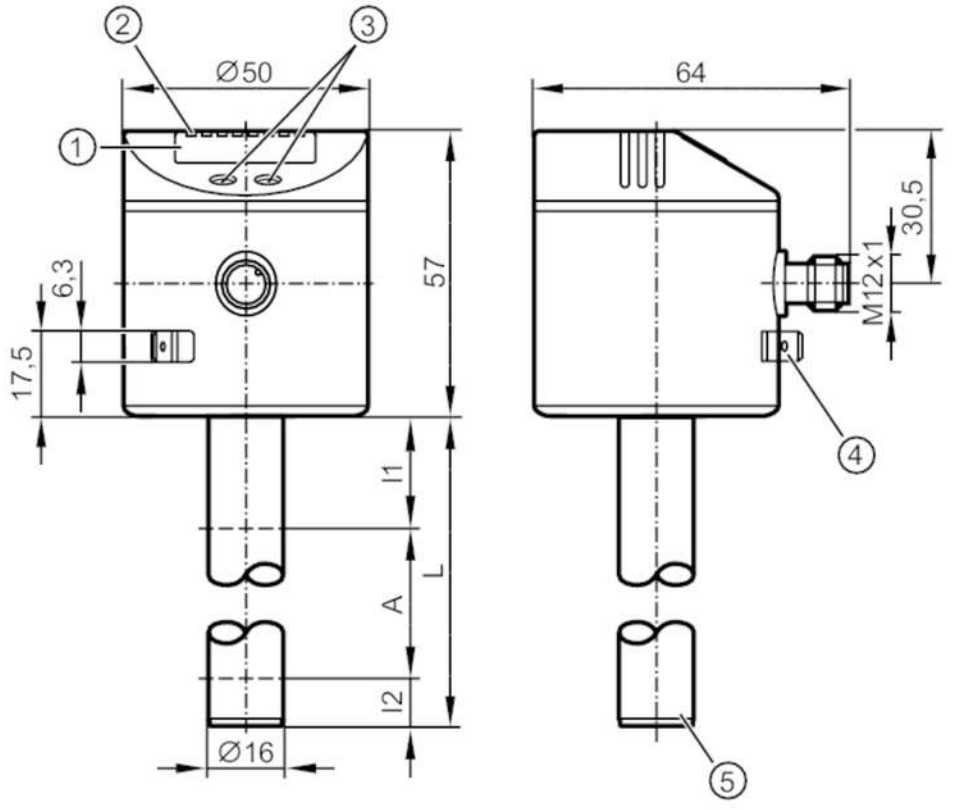

1 alphanumeric display 4-digit
2 status LEDs
3 programming buttons
4 housing connection flat-pin connector 6.3 mm DIN 46244
5 position of the temperature measuring element

Product characteristics			
Number of inputs and outputs		Number of digital outputs: 4	
Factory setting		2 switching outputs level (OUT1, OUT2); 2 switching outputs temperature (OUT3, OUT4); mineral oils	
Probe length L	[mm]	728	
Application			
Media		hydrous coolants; oils; oil-based media; water; media similar to water	
Dielectric constant of the medium		> 2	
Cannot be used for		extremely conductive media; adhering media; granulates; bulk material; acids; alkali	
Tank pressure		0.5; (when mounting with mounting accessories: E43001 - E43007, E43019) bar	0.05; (when mounting with mounting accessories: E43001 - E43007, E43019) MPa
Coolants			
Medium temperature	[°C]	0...35; (with climatic tube E43102 35...55 °C)	
Oil			
Medium temperature	[°C]	0...70	

LT8024

Electronic level and temperature sensor

LT0728B-B-00KSPKG/US

Medium temperature short time	[°C]	0...90; (< 1 h)
Water		
Medium temperature	[°C]	0...35; (with climatic tube E43102 35...55 °C)
Electrical data		
Operating voltage	[V]	18...30 DC
Current consumption	[mA]	< 50
Protection class		III
Reverse polarity protection		yes
Power-on delay time	[s]	< 3
Measuring principle		capacitive
Inputs / outputs		
Number of inputs and outputs		Number of digital outputs: 4
Outputs		
Total number of outputs		4
Output signal		switching signal; IO-Link
Electrical design		PNP/NPN
Number of digital outputs		4
Output function		normally open / normally closed; (parameterisable)
Max. voltage drop switching output DC	[V]	2.5
Permanent current rating of switching output DC	[mA]	200
Short-circuit protection		yes
Type of short-circuit protection		thermal, pulsed
Overload protection		yes
Measuring/setting range		
Factory setting		2 switching outputs level (OUT1, OUT2); 2 switching outputs temperature (OUT3, OUT4); mineral oils
Probe length L	[mm]	728
Active range A	[mm]	585
Inactive range I1 / I2	[mm]	104 / 39
Setting range		
Set point SP	[mm]	60...590
Reset point rP	[mm]	50...580
In steps of	[mm]	10
Reference point OP	[mm]	200 - 240 - 280 - 310 - 350 - 390 - 420 - 460 - 500 - 530 - 570 - 610 - OFF
Hysteresis, OP	[mm]	4
Temperature monitoring		
Measuring range	[°C]	-20...90
Set point SP	[°C]	-19.5...90
Reset point rP	[°C]	-20...89.5
In steps of	[°C]	0.5

LT8024

Electronic level and temperature sensor

LT0728B-B-00KSPKG/US

Resolution of switching output [K]	0.5	
Accuracy / deviations		
Measuring error [% of the final value]	± 5	
Repeatability	± 2	
Resolution [mm]	10	
Temperature monitoring		
Switch point accuracy [K]	± 1,5	
Resolution [K]	0.5	
Dynamic response T09 [s]	90	
Software / programming		
Parameter setting options	hysteresis / window; normally open / normally closed; SP/rP position; OP position; adjustment OP; medium selection; offset setting; Display unit; process value assignment	
Interfaces		
Communication interface	IO-Link	
Transmission type	COM2 (38,4 kBaud)	
IO-Link revision	1.1	
SDCI standard	IEC 61131-9	
Profiles	Smart Sensor: Process Data Variable; Device Identification, Device Diagnosis	
SIO mode	yes	
Required master port type	A	
Process data analogue	4	
Process data binary	4	
Min. process cycle time [ms]	4.5	
Supported DeviceIDs	**Type of operation**	**DeviceID**
	default	20
Operating conditions		
Ambient temperature [°C]	0...60	
Storage temperature [°C]	-25...80	
Protection	IP 67	
Tests / approvals		
EMC	DIN EN 61000-6-2	
	DIN EN 61000-6-4	
Shock resistance	DIN EN 60068-2-27	15 g (11 ms)
Vibration resistance	DIN EN 60068-2-6	5 g (10...2000 Hz)
MTTF [years]	224	
Mechanical data		
Weight [g]	550.5	
Dimensions [mm]	Ø 16	
Materials	stainless steel (304/1.4301); stainless steel (316L/1.4404); FKM; NBR; PBT; PC; PA; PP; TPV	
Materials (wetted parts)	PP	

LT8024

Electronic level and temperature sensor

LT0728B-B-00KSPKG/US

Displays / operating elements		
Display	Display unit	4 x LED, green (cm, inch, °C, °F)
	switching status	4 x LED, yellow (OUT4...OUT1)
	measured values	alphanumeric display, 4-digit
	parameter setting	alphanumeric display, 4-digit

Remarks	
Pack quantity	1 pcs.

Electrical connection

Connector: 1 x M12; coding: A



Connection

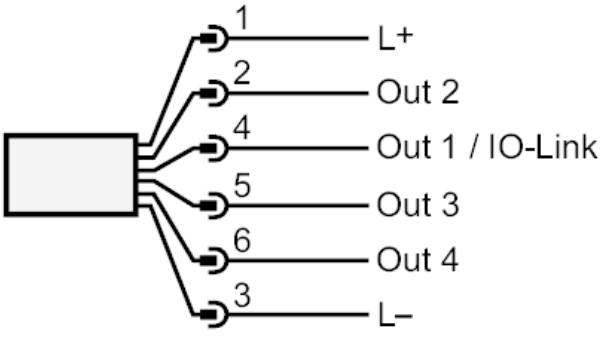

OUT1: switching output IO-Link
OUT2...4: switching output