finder®
SWITCH TO THE FUTURE

Step relays 10 A



Lighting control in corridors (for hotels, offices and hospitals)

Bedroom light control

Living room light control

27 SERIES

FINDER reserves the right to alter characteristics at any time without notice. FINDER assumes no liability for damage to persons or property, caused as a result of the incorrect use or application of its products.

1 or 2 Pole electromechanical step relay, for electrically common coil and contact circuits

27.0x - Connect up to 24 illuminated push buttons with the addition of module 027.00

27.2x - Connect up to 15 illuminated push buttons (without additional module) - incorporates coil power limiter to permit continuous coil energisation

- Choice of 3 switching sequences
- Screw terminal connections
- AC coil
- Panel mount
- Cadmium free contact material
- Italian Patent

27.0x / 2x
Screw terminal



For outline drawing see page 5

	27.0x	27.2x EVO
		
	• Single or 2 double phase switch 1 NO (SPST-NO) or 2 NO (DPST-NO)	• Single or 2 double phase switch 1 NO (SPST-NO) or 2 NO (DPST-NO) with coil power limiter
	27.01 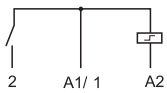 2 A1/ 1 A2 27.05 - 27.06 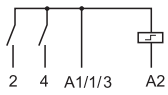 2 4 A1/1/3 A2	27.21  2 A1/ 1 A2 27.25 - 27.26 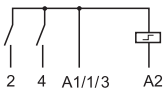 2 4 A1/1/3 A2

Contact specification				
Number of contacts		1 or 2		1 or 2
Rated current/Maximum peak current	A	10/20		10/20
Rated voltage/ Maximum switching voltage	V AC	110/—	230/—	230/—
Rated load AC1	VA	1100	2300	2300
Rated load AC15	VA	250	500	500
Nominal lamp rating:				
230 V incandescent/halogen	W	—	1000	1000
fluorescent tubes with electronic ballast	W	200	400	400
fluorescent tubes with electromechanical ballast	W	180	360	360
CFL	W	100	200	200
230 V LED	W	—	200	200
LV halogen or LED with electronic ballast	W	100	200	200
LV halogen or LED with electromechanical ballast	W	200	400	400
Minimum switching current	mW (V/mA)	10		10
Standard contact material		AgNi		AgNi
Coil specification				
Nominal voltage (U_N)	V AC (50/60 Hz)	110	230	230
	V DC	—		—
Pickup/continuous power	VA (50 Hz)	4/4		25/1
Operating range	AC 50 Hz/AC 60 Hz	$(0.8…1.1)U_N$ / $(0.85…1.1)U_N$		$(0.8…1.1)U_N$ / $(0.85…1.1)U_N$
	DC	—		—
Technical data				
Mechanical life AC/DC	cycles	$300 \cdot 10^3$		$300 \cdot 10^3$
Electrical life at rated load in AC1	cycles	$100 \cdot 10^3$		$100 \cdot 10^3$
Max no. of illuminated push-button	(≤ 1 mA)	4 (24 with module 027.00)		15
Minimum/Maximum impulse duration		0.1 s/1 h (according to EN 60669)		0.1 s/continuous
Ambient temperature range	°C	–40…+40		–40…+40
Protection category		IP 20		IP 20
Approvals (according to type)				

Ordering information

Example: 27 series screw terminal, panel mount step relay, single phase switch 1 NO (SPST-NO) 10 A contact, coil rated 230 V AC.

2 7	.	0	.	1	.	8	.	2 3 0	.	0	.	0	.	0

Series

Type
0 = Clamp terminal
2 = Clamp terminal, with coil power limiter

No. of poles
1 = Single phase switch 1 NO (SPST-NO)
5 = 4 sequences double phase switch 2 NO (DPST-NO)
6 = 3 sequences double phase switch 2 NO (DPST-NO)

Coil voltage
See coil specifications

Coil version
8 = AC (50/60 Hz)

Technical data

Other data		27.01, 27.21		27.05, 27.06, 27.25, 27.26	
Power lost to the environment with rated current and coil de-energised	W	0.9		1.8	
Screw torque	Nm	0.8		0.8	
Max. wire size		solid cable	stranded cable	solid cable	stranded cable
	mm²	2 x 2.5	1 x 4 / 2 x 2.5	2 x 2.5	1 x 4 / 2 x 2.5
	AWG	2 x 14	1 x 12 / 2 x 14	2 x 14	1 x 12 / 2 x 14

Coil specifications

Types 27.01, 27.05, 27.06

Nominal voltage U_N	Coil code	Operating range (50 Hz) U_{min}	U_{max}	Resistance R	Consumption I at U_N (50 Hz)
V		V	V	Ω	mA
110	**8**.110	88	121	1400	42.0
230	**8**.230	184	253	6500	17.5

Types 27.21, 27.25, 27.26

Nominal voltage U_N	Coil code	Operating range (50 Hz) U_{min}	U_{max}	Resistance R	Consumption pick up I at U_N (50 Hz)	Consumption continuous I at U_N (50 Hz)
V		V	V	Ω	mA	mA
230	**8**.230	184	253	1250	100	4

Type	Number of steps	Sequence 1	2	3	4
27.01/21	2				
27.05/25	4				
27.06/26	3				

K

Wiring diagram

Type 27.01/05/06

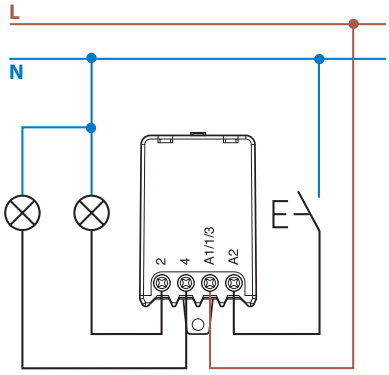

Type 27.21/25/26

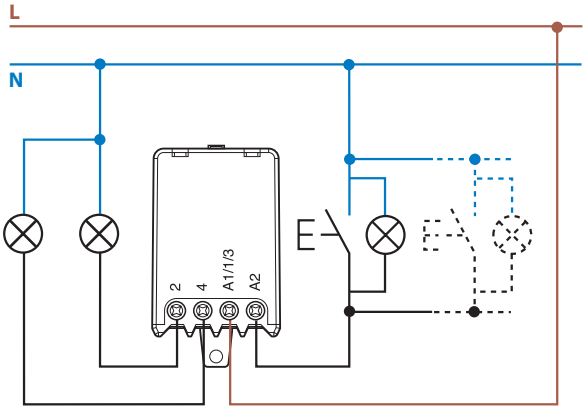

X-2017, www.findernet.com

Accessories for types 27.01, 27.05, 27.06

Module for illuminated push-button (230 V AC applications)



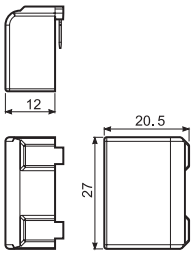

Type 027.00
This module is necessary if using up to a maximum of 24 illuminated push-buttons (1 mA max, 230 V AC) in the switching input circuit.
It must be plugged directly into the relay.



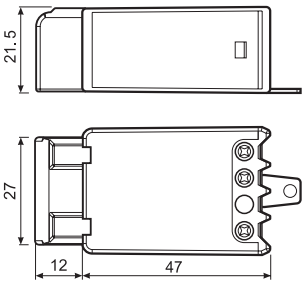

Type 27.0x + 027.00

Outline drawings

27.0x / 2x
Screw terminal



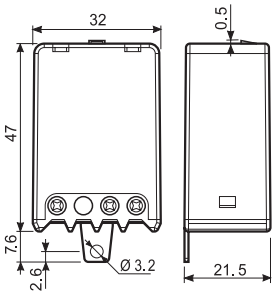

K