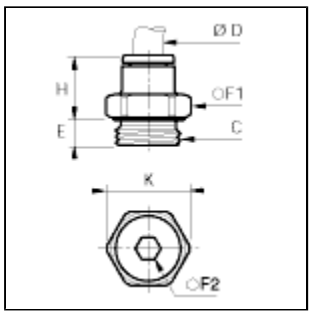

3101

MALE STUD FITTINGS, HEXAGONAL, BSPP AND METRIC

for metric tubing

legris connectic	ØD (mm)	C	E (mm)	F1 (mm)	F2 (mm)	H (mm)	K (mm)	(kg)
3101 03 09	3	M3x0,5	2,5	8,0		12,5		0,003
3101 03 19	3	M5x0,8	3,5	8,0	2,5	12,5	8,5	0,004
3101 04 09	4	M3x0,5	2,5	8,0		14,5		0,003
3101 04 10	4	G1/8	5,0	13,0	3,0	11,5	14,0	0,007
3101 04 13	4	G1/4	5,5	16,0	3,0	10,5	17,5	0,011
3101 04 19	4	M5x0,8	3,0	8,0	2,5	14,0	8,5	0,003
3101 04 55	4	M7x1	5,0	10,0	2,5	14,0	11,0	0,004
3101 06 10	6	G1/8	5,0	13,0	4,0	13,0	14,0	0,007
3101 06 13	6	G1/4	5,5	16,0	4,0	12,5	17,5	0,010
3101 06 17	6	G3/8	5,5	20,0	4,0	13,0	22,0	0,020
3101 06 19	6	M5x0,8	3,0	10,0	2,5	16,0	11,0	0,005
3101 06 21	6	G1/2	7,5	24,0	4,0	20,0	26,0	0,039
3101 06 55	6	M7x1	5,0	10,0	3,0	16,0	11,0	0,005
3101 06 60	6	M10x1	5,0	13,0	4,0	13,0	14,0	0,030
3101 06 67	6	M12x1,5	5,5	15,0	4,0	13,0	16,0	0,009
3101 08 10	8	G1/8	4,5	13,0	5,0	20,5	14,0	0,011
3101 08 13	8	G1/4	5,5	16,0	6,0	19,5	17,5	0,015
3101 08 17	8	G3/8	5,5	20,0	6,0	18,0	22,0	0,022
3101 08 21	8	G1/2	7,5	24,0	6,0	16,5	26,0	0,039
3101 08 60	8	M10x1	5,0	13,0	5,0	21,0	14,0	0,012
3101 08 67	8	M12x1,5	5,5	15,0	5,0	21,0	16,0	0,030
3101 10 13	10	G1/4	5,5	16,0	7,0	23,0	17,5	0,017
3101 10 17	10	G3/8	5,5	20,0	8,0	19,5	22,0	0,020
3101 10 21	10	G1/2	7,5	24,0	8,0	18,5	26,0	0,032
3101 12 13	12	G1/4	5,5	19,0	7,0	27,5	21,0	0,027
3101 12 17	12	G3/8	5,5	20,0	9,0	27,0	22,0	0,029
3101 12 21	12	G1/2	7,0	24,0	10,0	22,5	26,0	0,035
3101 14 17	14	G3/8	5,5	22,0	9,0	29,5	24,0	0,040
3101 14 21	14	G1/2	7,0	24,0	10,0	28,0	26,0	0,045