18D
Electro-mechanical pneumatic pressure switches

- — -1 ... 30 bar Port size: G1/4, 1/4 NPT or flange
- — Microswitch with gold plated contacts
- — High number of switching cycles
- — Vibration resistant to 15 g
- — Microswitch approved by UL and CSA
- — Conforms to Low Voltage Directive 2006/95/EG
- — Intrinsically safe operation



Technical features

Medium:
For neutral, gaseous and liquid fluids, non-combustible (Special versions for water application)

Operation:
Diaphragm

Operating pressure:
-1 ... 30 bar (-14 ... 435 psi)

Maximum over pressure:
80 bar (1160 psi)

Repeatability:
±3% for vacuum; ±4% of final value
(depending on regulating pressure)

Port size:
G1/4, 1/4 NPF or flange

Media viscosity:
Up to 1000 mm^2/s

Switching pressure difference/hysteresis:
Fixed

Switching cycles:
100/min

Life cycle of mechanical parts:
10^7 switching cycles

Switching element:
Microswitch with gold plated contacts

Mounting position:
Optional

Degree of protection:
IP65 for DIN EN 175301-803 (DIN 43650) form A connection
IP67 for M12 x 1 connection

Electrical connection:
DIN EN 175301-803 (DIN 43650) form A or M12 x 1 IEC 947-5-2

Weight:
0,2 kg (0.44 lbs)

Ambient/Media temperature:
NBR: -10 ... +85°C (14 ... +185°F)
FPM: 0 ... +80°C (0 ... +176°F)
Air supply must be dry enough to avoid ice formation at temperatures below +2°C (+35°F)

Materials:
Housing: Aluminium (brass)
Sealing: NBR/FPM

Technical data
Electrical connection acc. to DIN EN 175301-803, form A

Symbol	Port size	Pressure range *1) (bar)	(psi)	Switching pressure difference Lower range (bar)	(psi)	Upper range (bar)	(psi)	Materials press sensor Body	Seal	Drawing No.	Model
	G1/4	-1 ... 0	-14 ... 0	0,15	2.17	0,18	2.61	AL	FPM *2)	1	0880100
	G1/4	-1 ... 1	-14 ... 14	0,25	3.62	0,35	5.07	AL	FPM *2)	1	0880110
	1/4 NPT	-1 ... 0	-14 ... 0	0,15	2.17	0,18	2.61	AL	FPM *2)	1	0880120
	G1/4	-1 ... 0	-14 ... 0	0,15	2.17	0,18	2.61	AL	FPM *2)	1	0880126 *3) *4)
	Flange	-1 ... 0	-14 ... 0	0,15	2.17	0,18	2.61	AL	FPM *2)	3	0881100
	G1/4	0,2 ... 2	2.9 ... 29	0,20	2.9	0,35	5.07	AL	FPM *2)	1	0880200
	1/4 NPT	0,2 ... 2	2.9 ... 29	0,20	2.9	0,35	5.07	AL	FPM	1	0880220
	G1/4	0,2 ... 4	2.9 ... 58	0,20	2.9	0,35	5.07	AL	FPM	1	0880226 *3) *4)
	Flange	0,2 ... 2	2.9 ... 29	0,20	2.9	0,35	5.07	AL	NBR	3	0881200
	G1/4	0,5 ... 8	7.2 ... 116	0,35	5.07	0,85	12.3	AL	NBR	2	0880300
	1/4 NPT	0,5 ... 8	7.2 ... 116	0,35	5.07	0,85	12.3	AL	NBR	2	0880320
	G1/4	0,5 ... 8	7.2 ... 116	0,35	5.07	0,85	12.3	AL	FPM	2	0880326 *3) *4)
	Flange	0,5 ... 8	7.2 ... 116	0,35	5.07	0,85	12.3	AL	NBR	3	0881300
	G1/4	1 ... 16	23.2 ... 232	0,40	5.8	1,20	17.4	AL	NBR	2	0880400
	1/4 NPT	1 ... 16	23.2 ... 232	0,40	5.8	1,20	17.4	AL	NBR	2	0880420
	G1/4	1 ... 16	23.2 ... 232	0,40	5.8	1,20	17.4	AL	FPM	2	0880426 *3) *4)
	Flange	1 ... 16	23.2 ... 232	0,40	5.8	1,20	17.4	AL	NBR	3	0881400
	G1/4	1 ... 30	23.2 ... 435	1,0	14.5	5,00	72.5	AL	NBR	2	0880600
	1/4 NPT	1 ... 30	23.2 ... 435	1,0	14.5	5,00	72.5	AL	NBR	2	0880620

*1) Setpoints should be ideally in the middle of the switching pressure range. Reference pressure = atmospheric pressure. Switching pressure must not exceed the indicated values.
*2) Static seal: O-ring (NBR)
*3) LABS free
*4) Plug 0570110 not included, please order separately.

Our policy is one of continued research and development. We therefore reserve the right to amend, without notice, the specifications given in this document. (1998 - 5249e) © 2024 Norgren GmbH

Electrical connection M12 x 1 nach IEC 947-5-2 - plug not included, max. allowable voltage 30 V

Symbol	Port size	Pressure range *1) (bar)	(psi)	Switching pressure difference Lower range (bar)	(psi)	Upper range (bar)	(psi)	Materials press sensor Body	Seal	Drawing No.	Model *2)
	G1/4	-1 ... 0	-14 ... 0	0,15	2.17	0,18	2.61	AL	FPM	1	0880149 *3)
	G1/4	-1 ... 0	-14 ... 0	0,15	2.17	0,18	2.61	AL	FPM	1	0880160
	G1/4	0,2 ... 2	2.9 ... 29	0,20	2.9	0,35	5.07	AL	FPM	1	0880260
	G1/4	0,5 ... 8	7.2 ... 116	0,35	5.07	0,85	12.3	AL	FPM	2	0880360
	G1/4	1 ... 16	23.2 ... 232	0,40	5.8	1,20	17.4	AL	FPM	2	0880460
	G1/4	1 ... 30	23.2 ... 435	1,00	14.5	5,00	72.5	AL	FPM	2	0880660
	Flange	-1 ... 0	-14 ... 0	0,15	2.17	0,18	2.61	AL	FPM	3	0881160
	Flange	0,2 ... 2	2.9 ... 29	0,20	2.9	0,35	5.07	AL	FPM	3	0881260
	Flange	0,5 ... 8	7.2 ... 116	0,35	5.07	0,85	12.3	AL	FPM	3	0881360
	Flange	1 ... 16	23.2 ... 232	0,40	5.8	1,20	17.4	AL	FPM	3	0881460

*1) Setpoints should be ideally in the middle of the switching pressure range. Reference pressure = atmospheric pressure. Switching pressure must not exceed the indicated values.
*2) LABS free
*3) Switching function reversed

Versions for water applications
Electrical connection acc. to DIN EN 175301-803, form A

Symbol	Port size	Pressure range *1) (bar)	(psi)	Switching pressure difference Lower range (bar)	(psi)	Upper range (bar)	(psi)	Materials press sensor Body	Seal	Drawing No.	Model
	G1/4	0,2 ... 2	2.9 ... 29	0,20	2.9	0,35	5.07	Brass	FPM	1	0880219
	1/4 NPT	0,2 ... 2	2.9 ... 29	0,20	2.9	0,35	5.07	Brass	FPM	1	0880240
	G1/4	0,5 ... 8	7.2 ... 116	0,35	5.07	0,85	12.3	Brass	FPM	2	0880323

*1) Setpoints should be ideally in the middle of the switching pressure range. Reference pressure = atmospheric pressure. Switching pressure must not exceed the indicated values.

Accessories

Pressure port reducing nipple	Surge damper	Cover
		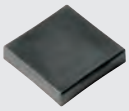
Page 4	Page 4	Page 4
0574767 (brass)	0574773 (brass)	0554737
0550083 (stainless steel)	0553258 (stainless steel)	

Connector DIN EN 175301-803	Connector M 12 x 1 4-pin, 90°		4-pin, straight	
				
0570110 (Form A)	0523058 (2 m cable,4-core)	0523056 (without cable)	0523057 (2 m cable, 4-core)	0523055 (without cable)
	0523053 (5 m cable,4-core)		0523052 (5 m cable, 4-core)	

Switching function

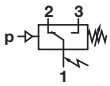

Connector
DIN EN 175301-803, form A
Microswitch SPDT
Terminals 1 - 3:
Contacts close on rising pressure.
Terminals 1 - 2:
Contacts open on rising pressure.

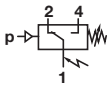

Connector
IEC 947-5-2, M12 x 1
Microswitch SPDT
Terminals 1 - 4:
Contacts close on rising pressure.
Terminals 1 - 2:
Contacts open on rising pressure.

Our policy is one of continued research and development. We therefore reserve the right to amend, without notice, the specifications given in this document. (1998 - 5249e) © 2024 Norgren GmbH

Switching capacity
Commutator with gold plated contacts

Current type	Load type *2)	U min [V]	Max. permissible persistent current Imax [A] at U *1) (UL & CSA) M12 x 1 DIN EN 175301-803, form A 30 V	30 V	48 V	125 V	250 V	Electrical life-time
a.c.	Ohmic, inductive	6	0,1	0,1	0,1	0,1	0,1	≥ 2 x 105 Switching cycles
d.c.	Ohmic, inductive	6	0,1	0,1	–	–	–	

Reference number: 20/min, Reference temperature: +20°C.
I min = 1 mA at 24 V d.c. or 5 mA at 6 V d.c.
*1) Higher currents (5 A max) will cause a reduction of the durability of the micro-switch contacts. Futhermore additional measures has to be taken to fulfil the EMV regulation 2004/108/EG by the manufacturer
*2) Spark quenching/overload protection will be necessary using inductive loads.

Recommended circuit
Spark quenching and EMV intrinsically safe

1. Quick diode (D) with tv ≤ 200 ns, parallel to inductive load.

2. RC link in parallel to load in parallel to switching contact.
Dimensioning principles:
RL in Ω ≈ 0,2 x RLoad in Ω
C in [µF] ≈ ILoad in [A]

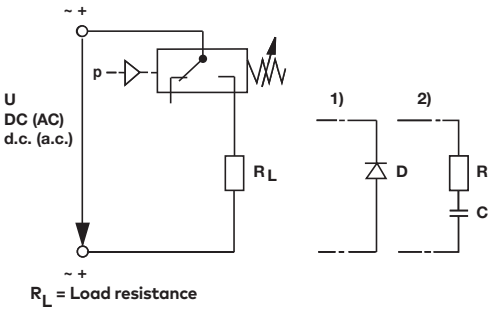

Drawings

Dimensions in mm
Projection/First angle

1

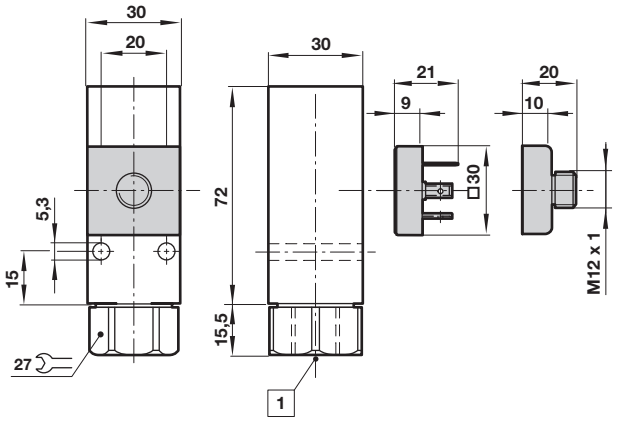

2

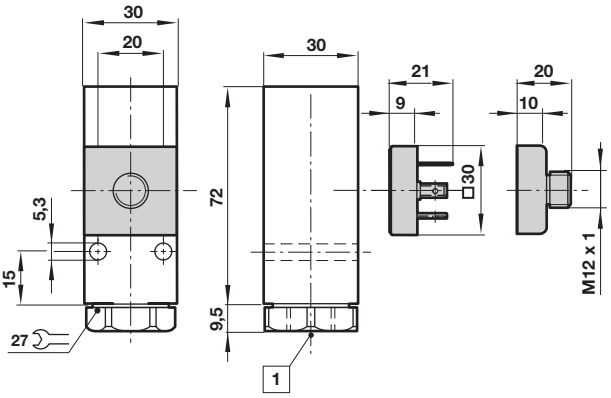

3

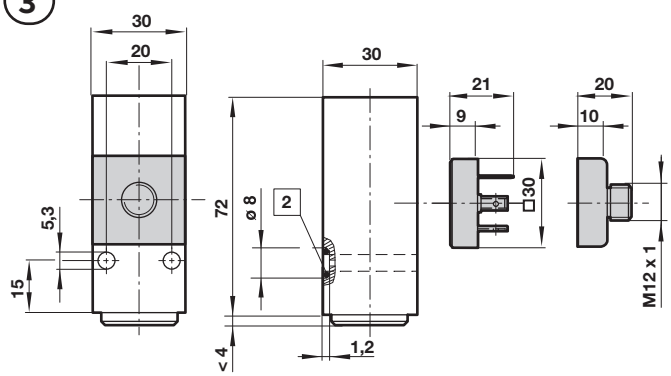

1 Fluid port
2 O-ring 5 x 1,5

Adjustable switch point

After releasing the locking screw
Clockwise rotation = increasing switch point
Counter clockwise rotation = decreasing the switch point

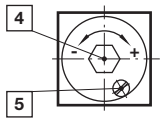

4 Switch point screw
5 Locking screw

Our policy is one of continued research and development. We therefore reserve the right to amend, without notice, the specifications given in this document. (1998 - 5249e) © 2024 Norgren GmbH

Pressure port reducing nipple

Model: 0574767 (brass)
0550083 (stainless steel)

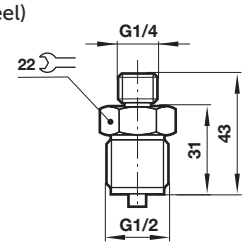

Surge damper

Model: 0574773 (brass)
0553258 (stainless steel)

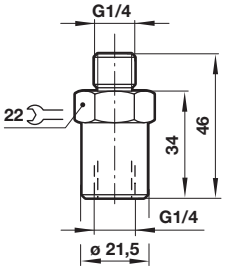

Cover

Model: 0554737 (plastic)

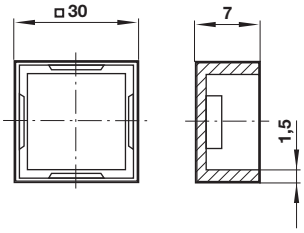

Dimensions in mm
Projection/First angle

Warning

These products are intended for use in industrial compressed air systems only. Do not use these products where pressures and temperatures can exceed those listed under »Technical features/ data«.

Before using these products with fluids other than those specified, for non-industrial applications, life-support systems or other applications not within published specifications,
consult Norgren Ltd.
Through misuse, age, or malfunction, components used in fluid power systems can fail in various modes.

The system designer is warned to consider the failure modes of all component parts used in fluid power systems and to provide adequate safeguards to prevent personal injury or damage to equipment in the event of such failure.
System designers must provide a warning to end users in the system instructional manual if protection against a failure mode cannot be adequately provided.
System designers and end users are cautioned to review specific warnings found in instruction sheets packed and shipped with these products.

Our policy is one of continued research and development. We therefore reserve the right to amend, without notice, the specifications given in this document. (1998 - 5249e) © 2024 Norgren GmbH