Your Expert Partner for **Human Machine Interfaces**

Actuator

Distribution by
Rs-online

704.122.018

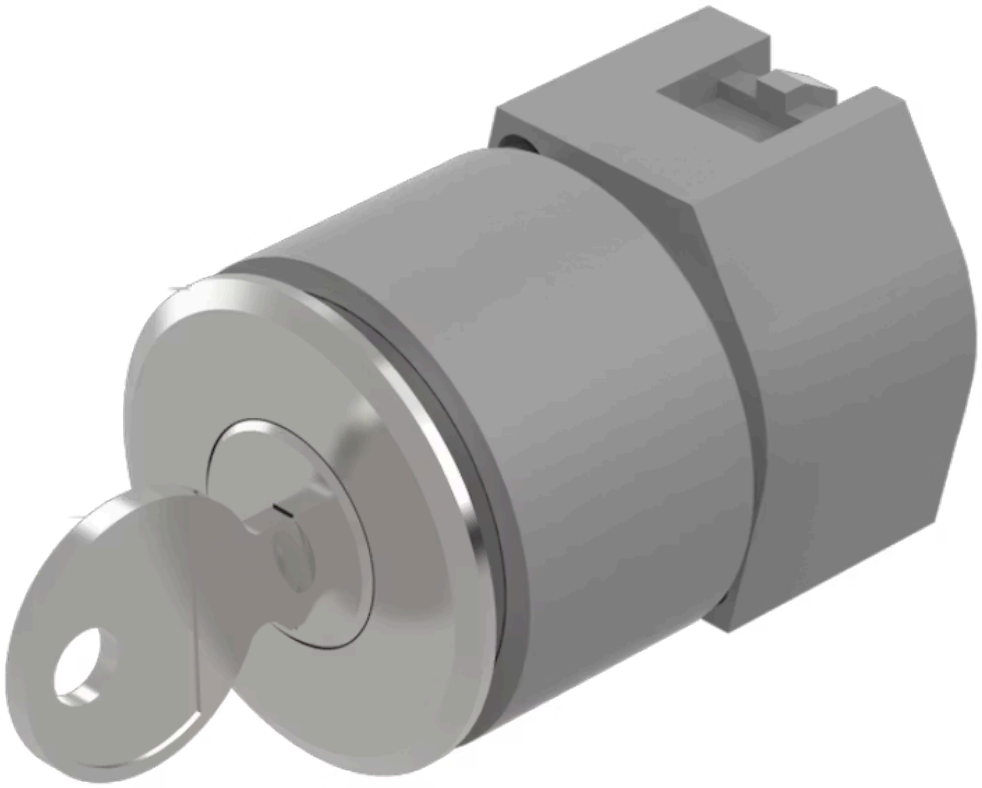

https://rs-online.eao.com/component/704.122.0...

Your product:



704.122.018
Actuator

FRONT

Front dimension:	Ø 35 mm
Front form:	Round
Front bezel colour:	Nature
Front bezel material:	Aluminium

MOUNTING

Design:	Flush
Mounting cut-out:	Ø 30.5 mm
Mounting type:	Panel mounting

ELECTRICAL CHARACTERISTICS

Standards:	The switches comply with the “Standards for low-voltage switching devices” DIN EN 60947-1

MECHANICAL CHARACTERISTICS

Switching action:	Rest (a) - Maintained (a)
Switching positions:	2 positions
Switching angle:	90° right / -45° ... +45°
Mechanical lifetime:	≤50 000 cycles of operation
Weight:	0.097 kg

AMBIENT CONDITION

IP Protection:	IP65 front side

Operating temperature:	– 40 °C ... + 55 °C
Storage temperature:	– 40 °C ... + 85 °C

CERTIFICATE

REACH:	REACH compliant
RoHS:	RoHS compliant

OTHER

Short Description:	Actuator, Ø 30.5 mm, Ø 35 mm, Round, Nature, Aluminium, Rest (a) - Maintained (a)
Hints:	The standard lock Ronis 251 Further lock numbers on request Max. 3 switching elements can be clipped on
max. number of switching elements:	3
Switching positions:	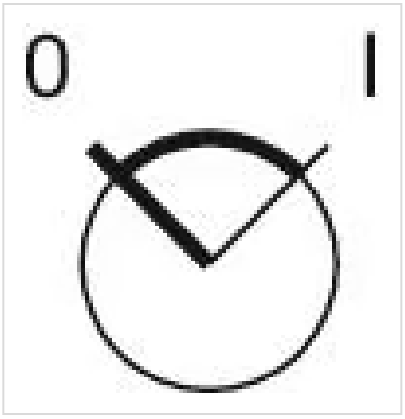
Wiring diagrams:	
Mounting cut-outs:	

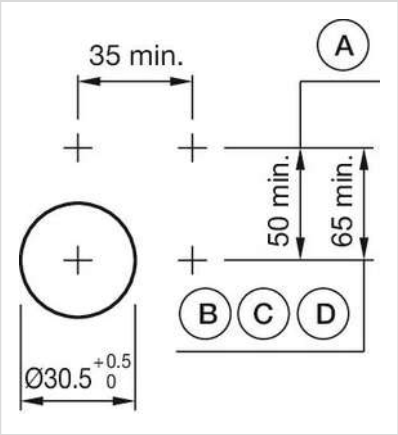

A = Screw terminal
B = Push-in terminal (PIT)
C = Plug-in terminal 6.3 mm x 0.8 mm
D = Double plug-in terminal 6.3 mm x 0.8 mm

Dimension drawings:

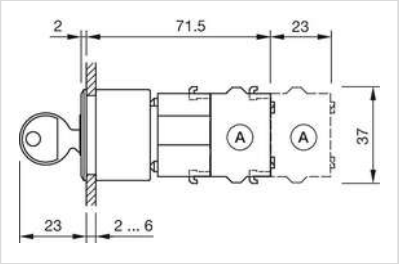

A = Screw terminal