# IES200

## Inductive sensor

**IEB3003BBPKG/V4A/K1/AS**

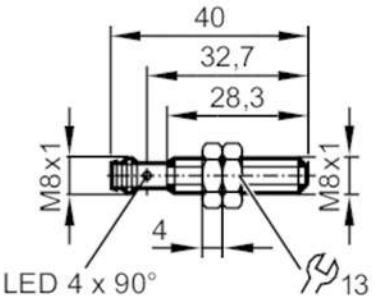


EC 1935/2004

| | | |
|---|---|---|
| **Product characteristics** | | |
| Electrical design | | PNP |
| Output function | | normally open |
| Sensing range | [mm] | 3 |
| Housing | | threaded type |
| Dimensions | [mm] | M8 x 1 / L = 40 |
| **Application** | | |
| Special feature | | Gold-plated contacts; Increased sensing range; Correction factor K = 1; Magnetic-field immune |
| Application | | material handling; refrigerated warehouse / shock freezing |
| Magnetic-field immune | | yes |
| Max. magnetic field immunity | [mT] | 300 |
| **Electrical data** | | |
| Operating voltage | [V] | 10...30 DC |
| Current consumption | [mA] | < 20 |
| Protection class | | III |
| Reverse polarity protection | | yes |
| **Outputs** | | |
| Electrical design | | PNP |
| Output function | | normally open |
| Max. voltage drop switching output DC | [V] | 2.5 |
| Permanent current rating of switching output DC | [mA] | 100 |
| Switching frequency DC | [Hz] | 2000 |
| Short-circuit protection | | yes |
| Overload protection | | yes |
| **Detection zone** | | |
| Sensing range | [mm] | 3 |
| Real sensing range Sr | [mm] | 3 ± 10 % |
| Operating distance | [mm] | 0...2.43 |
| Increased sensing range | | yes |

# IES200

## Inductive sensor

**IEB3003BBPKG/V4A/K1/AS**

| | | | |
|---|---|---|---|
| **Accuracy / deviations** | | | |
| Correction factor | | steel: 1 / stainless steel: 1 / brass: 1 / aluminium: 1 / copper: 1 | |
| Hysteresis | [% of Sr] | 3...15 | |
| Switch point drift | [% of Sr] | -10...10 | |
| Correction factor K = 1 | | yes | |
| **Operating conditions** | | | |
| Ambient temperature | [°C] | -40...85 | |
| Protection | | IP 65; IP 66; IP 67; IP 68; IP 69K; (with ifm socket duly screwed on) | |
| **Tests / approvals** | | | |
| EMC | | EN 61000-4-2 ESD | 4 kV CD / 8 kV AD |
| | | EN 61000-4-3 HF radiated | 10 V/m |
| | | EN 61000-4-4 Burst | 2 kV |
| | | EN 61000-4-6 HF conducted | 10 V |
| | | EN 55011 | class B |
| Vibration resistance | | EN 60068-2-6 Fc | 20 g (10...3000 Hz) / 50 sweep cycles, 1 octave per minute, in 3 axes |
| Shock resistance | | EN 60068-2-27 Ea | 100 g 11 ms half-sine; 3 shocks each in every direction of the 3 coordinate axes |
| Continuous shock resistance | | EN 60068-2-27 | 40 g 6 ms; 4000 shocks each in every direction of the 3 coordinate axes |
| Fast temperature change | | EN 60068-2-14 Na | TA = -40 °C; TB = 85 °C; t1 = 30 min; t2 = < 10 s; 50 cycles |
| Salt spray test | | EN 60068-2-52 Kb | severity level 5 (4 test cycles) |
| MTTF | [years] | 561 | |
| Embedded software included | | yes | |
| UL approval | | Ta | -25...80 °C |
| | | Enclosure type | Type 1 |
| | | power supply | Limited Voltage/Current |
| | | UL Approval no. | A011 |
| | | File number UL | E174191 |
| **Mechanical data** | | | |
| Weight | [g] | 14.4 | |
| Housing | | threaded type | |
| Mounting | | flush mountable | |
| Dimensions | [mm] | M8 x 1 / L = 40 | |
| Thread designation | | M8 x 1 | |
| Materials | | stainless steel (1.4404 / 316L); sensing face: LCP white; LED window: PEI; lock nuts: stainless steel (1.4404 / 316L) | |
| Tightening torque | [Nm] | A = 6 mm: 2 Nm; B: 5 Nm | |
| **Displays / operating elements** | | | |
| Display | | switching status | 4 x 90° LED, yellow |
| **Accessories** | | | |
| Items supplied | | lock nuts: 2 | |
| **Remarks** | | | |
| Pack quantity | | 1 pcs. | |

# IES200

## Inductive sensor

**IEB3003BBPKG/V4A/K1/AS**

## Electrical connection - plug

Connector: 1 x M8; coding: A; Contacts: gold-plated

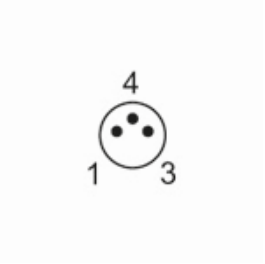


### Connection

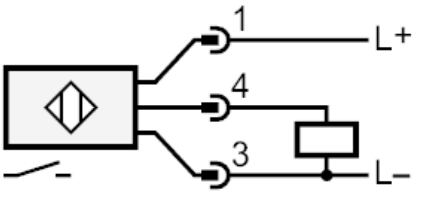


## Diagrams and graphs

Installation

