1591E Enclosure

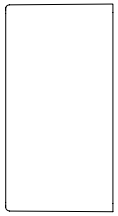

SIDE VIEW OF BOX

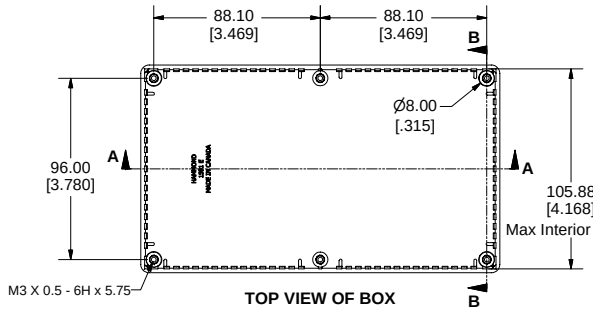

TOP VIEW OF BOX

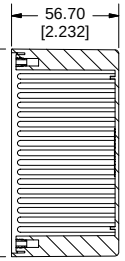

SECTION B-B

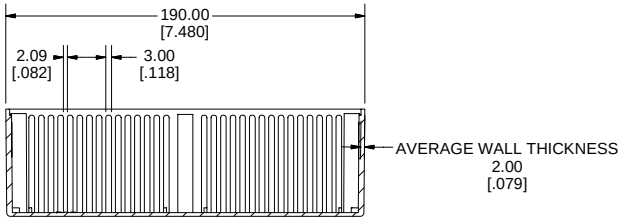

SECTION A-A

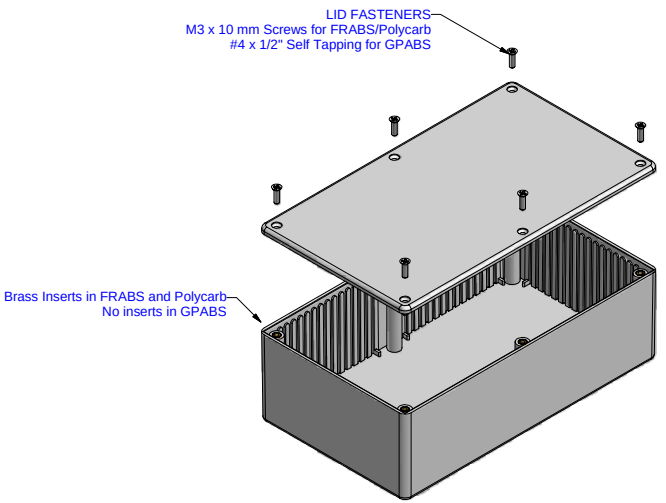

EXPLODED VIEW OF ASSEMBLY

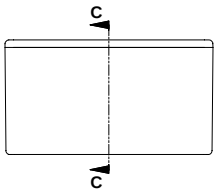

END VIEW OF ASSEMBLY

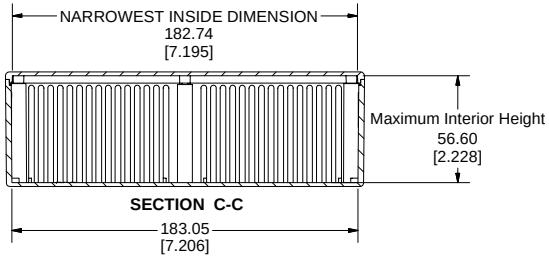

SECTION C-C

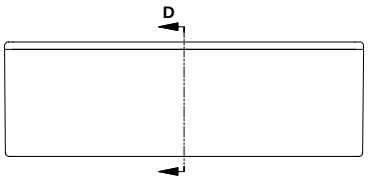

SIDE VIEW OF ASSEMBLY

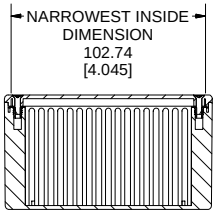

SECTION D-D

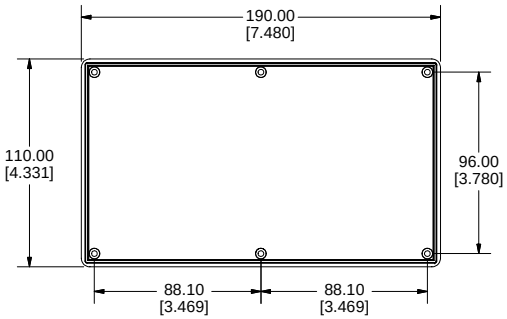

BOTTOM OF LID

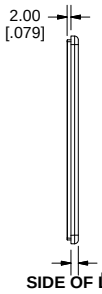

SIDE OF LID

Note:

Enclosures can be Factory Modified (Milling, Drilling, Printing etc.)
Solid models of this enclosure available in STEP or IGES Format.
Contact Factory mjm@hammondmfg.com

HAMMOND MANUFACTURING™

www.hammondmfg.com

PART NUMBERS		
1591E Enclosures		
Material	**Colour**	**Part Number**
FR ABS UL94 - V0	Black	1591EBK
	Grey	1591EGY
	Black Shielded (Conductive Paint)	1591REBK
GP ABS	Black	1591ESBK
	Grey	1591ESGY
Translucent Polycarbonate	Ice Blue	1591ETBU
	IR Red	1591ETRD
	Crystal Clear	1591ETCL
Accessories		
	Description	**Part Number**
Universal Application	PC Board Card Adapters	See Accessories Section
	Flange Kits	See Accessories Section
	Clear Lids - clear, flame retardant polycarbonate - Lid ONLY	1591EC
FR ABS & Polycarbonate	Replacement Screws, Flat head Phillips, Nickel Plated Pkg of 100	1591MS100 1591MS100BK (Black)
GP ABS	Self Tapping Pkg of 100	1591TS100 1591TS100BK (Black)
Required Torque on Fasteners (no lubrication)		
	M3 - 0.5 x 10mm Screws	30-40 cN*m
	#4 x 0.5 Screws	30-40 cN*m