OTDC16-32F

1SCC301079M0203 **Document no. 34 OTDC16-32F C**

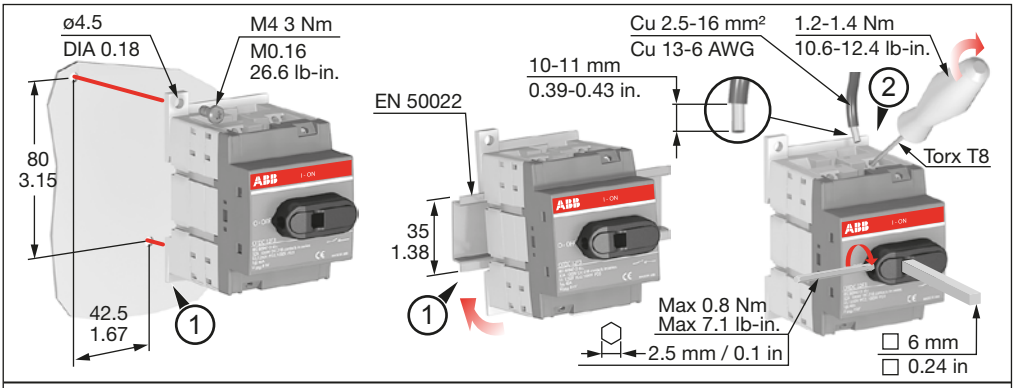

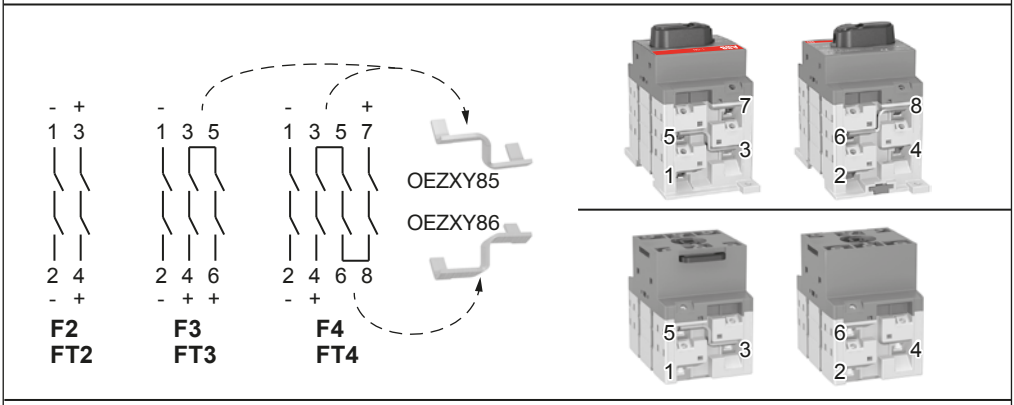

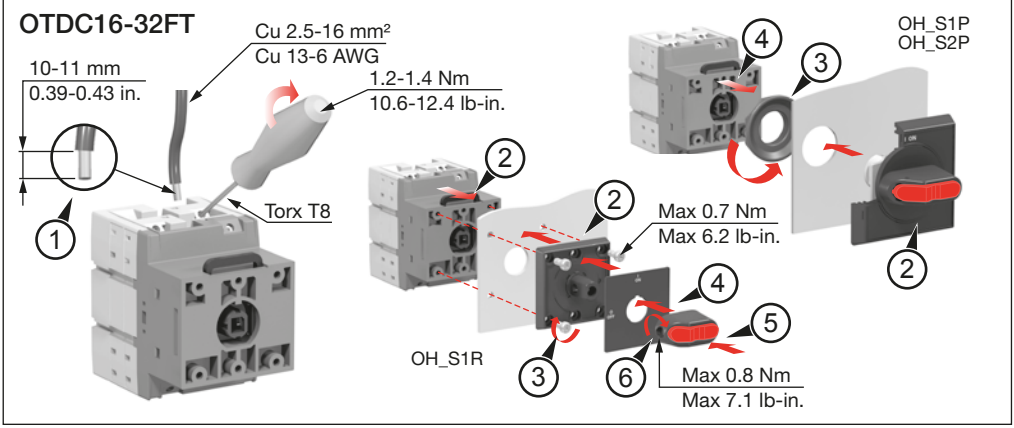

ABB Oy
Breakers and Switches
P.O. Box 622
FI-65101 Vaasa, Finland

Telephone +358-10 22 11
Telefax +358-10 224 5708

OTDC16-32F

1SCC301079M0203 **Document no. 34 OTDC16-32F C**

mm
in

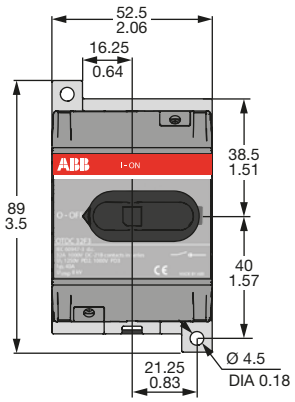

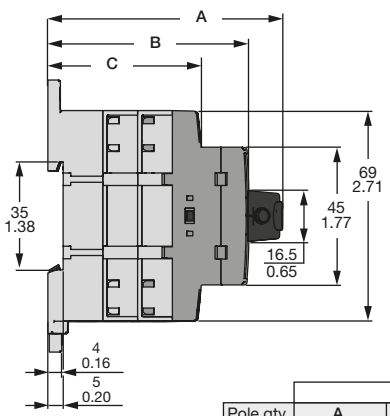

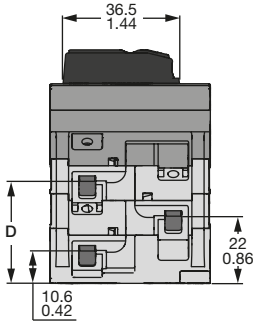

Pole qty.	Dimension (mm) / (in)			
	A	B	C	D
2	66.2 / 2.45	54.1 / 2.13	38.3 / 1.51	22 / 0.86
3	77.6 / 3.05	65.5 / 2.58	49.7 / 1.95	33.4 / 1.31
4	89 / 3.50	76.9 / 3.03	61.1 / 2.40	44.8 / 1.76

Installation and use without external handle

In case an external handle is not used, sufficient finger protection must be ensured, in accordance to the given dimensions (E).

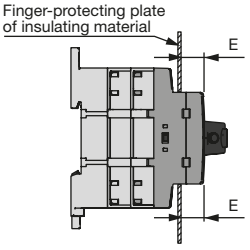

Maximum dimensions (E) and rated insulation voltage in pollution degree 2.

U_i (V)	max. E (mm) / (in)
1000	5 / 0.19
830	8 / 0.31
690	12 / 0.47

OTDC16-32FT

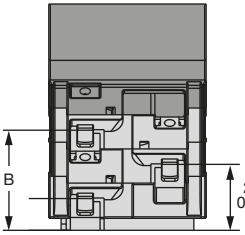

Ensure the minimum spacing of 16 mm / 0.63 in from cable terminals and terminal links to any uninsulated parts.

Pole qty.	Dimension (mm) / (in)			
	B	C	D	E
2	64.1 / 2.52	38.3 / 1.50	22 / 0.86	79.9 / 3.14
3	75.5 / 2.97	49.7 / 1.95	33.4 / 1.31	91.3 / 3.59
4	86.9 / 3.42	61.1 / 2.40	44.8 / 1.76	102.7 / 4.04

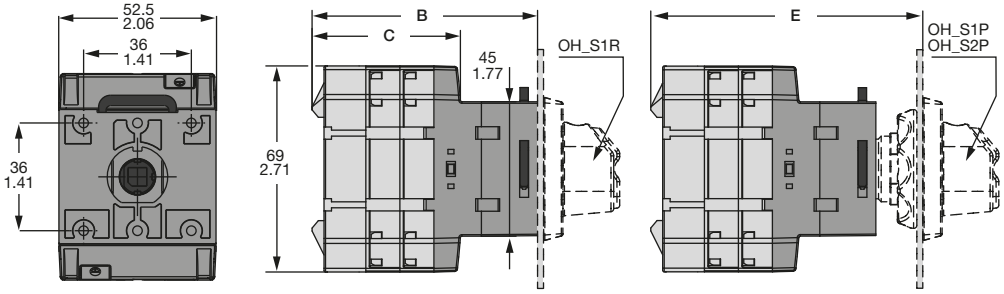

ABB Oy
Breakers and Switches
P.O. Box 622
FI-65101 Vaasa, Finland

Telephone +358-10 22 11
Telefax +358-10 224 5708