LED Traffic Light / Siren Combination 494 / Accessories

Lower fixing bow GY



Part No.: 975.894.01

MECHANICAL DATA	
Height	349 mm
Diameter	85 mm
Materials	PC/ABS
Housing colour	Grey
Weight with packaging	145 g
Product weight	145 g

APPROVAL DATA	
WEEE	No
Conforms with RED directive	No
Conforms with ATEX-directive	No
Conforms with CCC	No
Conforms with UL	No
Conforms with FCC	No
Conforms with IC	No
EAC certificate available	No
Conforms with AS-I	No
Conforms with DNV	No
Conforms with RoHS CN	No

! For additional installation and mounting information, refer to the appropriate user guide at www.werma.com. This printed copy is for information only and is subject to alteration.

LED Traffic Light / Siren Combination 494 / Accessories

Lower fixing bow GY

DRAWING

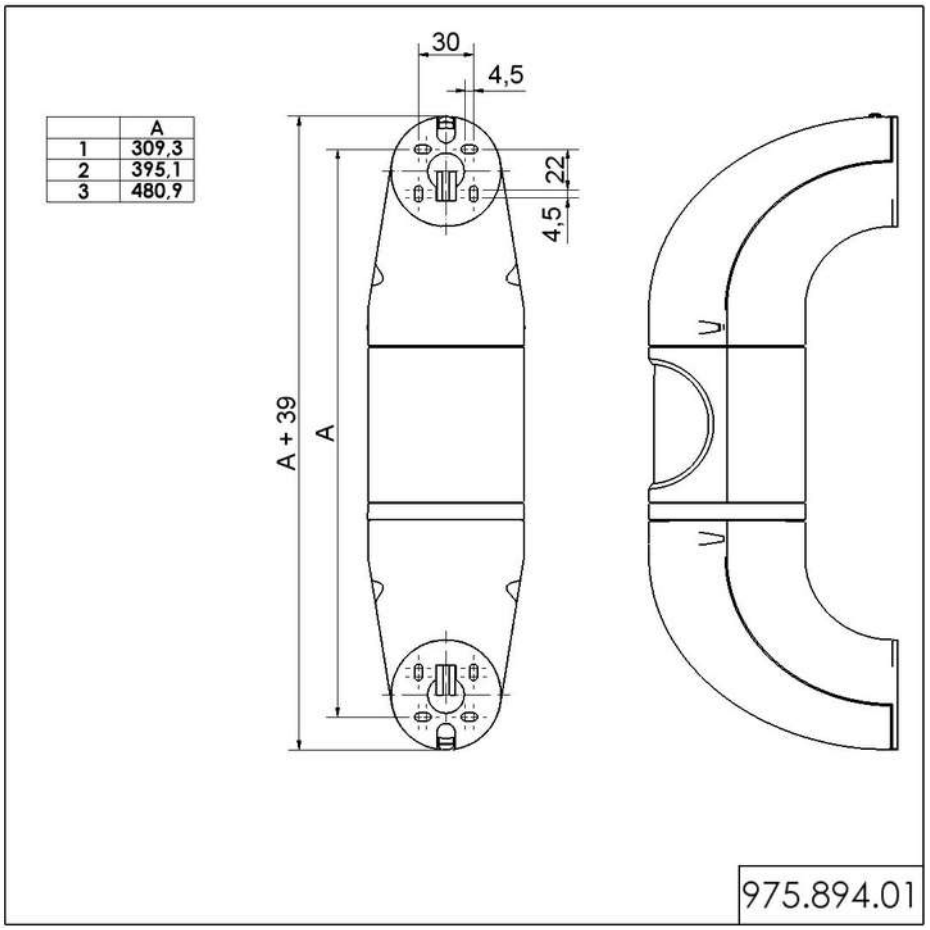

! For additional installation and mounting information, refer to the appropriate user guide at www.werma.com. This printed copy is for information only and is subject to alteration.