O8P202

Retro-reflective sensor

O8P-DPKG/IO-Link/0,30M/AS/3P

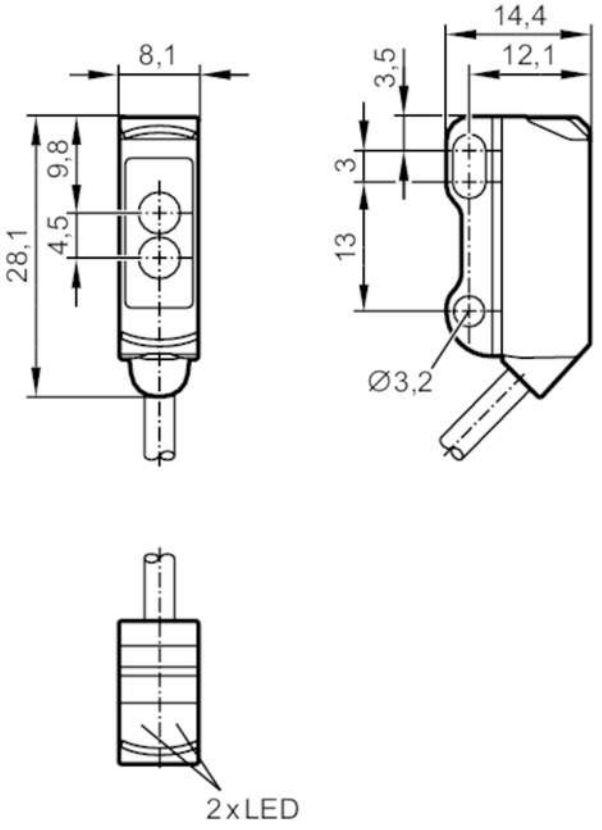

receiver in upper lens
transmitter in lower lens

IO-Link

Application		
Function principle		Retro-reflective sensor
Electrical data		
Operating voltage	[V]	10...30 DC
Current consumption	[mA]	20; ((24 V))
Protection class		III
Reverse polarity protection		yes
Type of light		red light
Wave length	[nm]	633

O8P202

Retro-reflective sensor

O8P-DPKG/IO-Link/0,30M/AS/3P

Outputs			
Output function		dark-on mode	
Max. voltage drop switching output DC	[V]	2.5	
Permanent current rating of switching output DC	[mA]	100	
Switching frequency DC	[Hz]	1000	
Electrical design		PNP	
Short-circuit protection		yes	
Type of short-circuit protection		pulsed	
Range			
Range	[mm]	20...1800; (Prismatic reflector Ø 30 E20004)	
Range adjustable		yes	
Max. light spot diameter	[mm]	120	
Light spot dimensions refer to		at maximum range	
Polarisation filter available		yes	
Interfaces			
Transmission type		COM2 (38.4 kBaud)	
IO-Link revision		1.1	
SDCI standard		IEC 61131-9	
IO-Link device ID		786 d / 00 03 12 h	
Profiles		Smart Sensor: Device Identification; Device Diagnosis; Teach Channel; Binary Data Channel	
SIO mode		yes	
Required master port type		A	
Operating conditions			
Ambient temperature	[°C]	-25...60	
Protection		IP 65; IP 67	
Tests / approvals			
EMC		EN 60947-5-2	
Mechanical data			
Weight	[g]	23	
Housing		rectangular	
Dimensions	[mm]	28.1 x 8.1 x 14.4	
Materials		housing: ABS; stainless steel (1.4404 / 316L)	
Lens material		PMMA	
Displays / operating elements			
Display		switching status	1 x LED, yellow
		operation	1 x LED, green
Remarks			
Pack quantity		1 pcs.	

O8P202

Retro-reflective sensor

O8P-DPKG/IO-Link/0,30M/AS/3P

Electrical connection

Cable: 0.3 m, PVC, black, Ø 2.9 mm; 3 x 0.08 mm²

Connector: 1 x M8



Connection

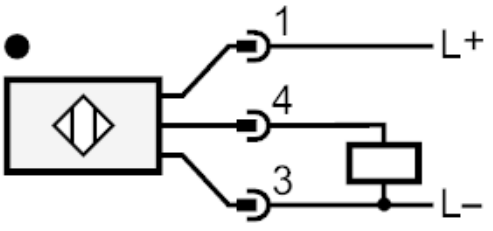

diagrams and graphs

excess gain graph

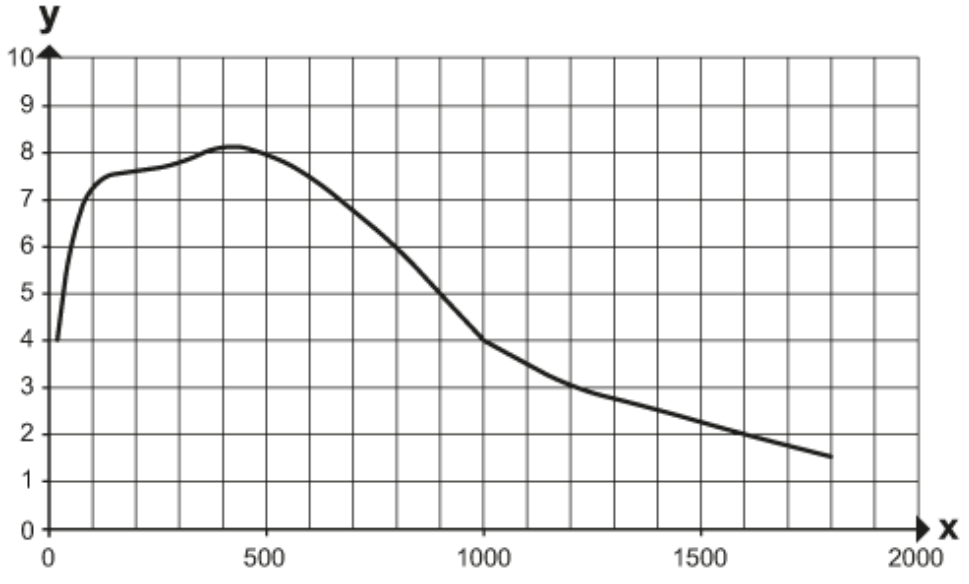

x: Abstand [mm]

y: Funktionsreservefaktor