Kit, unshielded, light, for connector

Print page

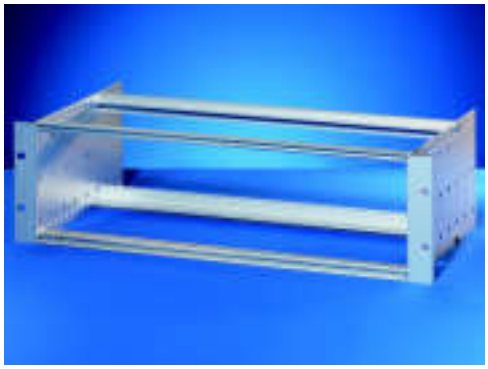

3 U

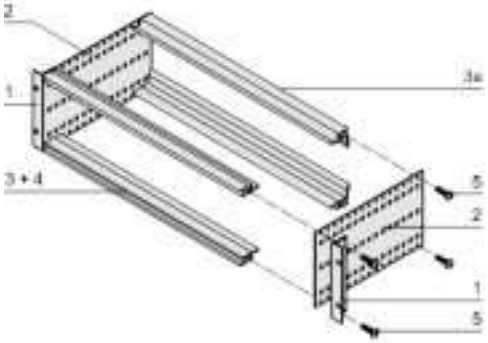



Rear horizontal rail for connector assembly

Article number: 24563-194

- Rear horizontal rail for connector assembly (IEC 60603-2/DIN 41612)
- Subrack in lightweight version

Delivery comprises: kit

Item	Qty	Description
1	2	19" support bracket
2	2	Side panel type F
3	2	Front horizontal rail (L-SL)
3a	2	Rear horizontal rail (L-WZ)
4	2	Threaded insert, pre-mounted
5	1	Assembly kit

Technical data:

Description	Height	Width	Depth
Kit, unshielded, for connector	3 U	84 HP	355 mm

Accessories:

Article number	Description
24560-351	Guide rail, 160 mm deep PBT, UL 94 V-0, red, groove width 2 mm, PU 10 pieces
24560-353	Guide rail, 220 mm deep PBT, UL 94 V-0, red, groove width 2 mm, PU 10 pieces

24560-255	ESD clip for guide rail PU 50 pieces
24561-051	Cover plate standard, 160 mm deep Al, 1.2 mm, perforated, to push into light horizontal rail, PU 2 pieces
24561-052	Cover plate standard, 220 mm deep Al, 1.2 mm, perforated, to push into light horizontal rail, PU 2 pieces
21100-435	Assembly set, PU 8 x screw, washer, nut for assembly of subracks in a 19" case or a cabinet

Further Information:

	3D PDF with CAD data (STEP/DWG/DXF/PDF)
	User Manual

Montageanweisung
europac PRO
Baugruppenträger

Assembly instructions
europac PRO
Subrack

Instructions de montage
europac PRO
Bac à cart

3 HE / 3 U

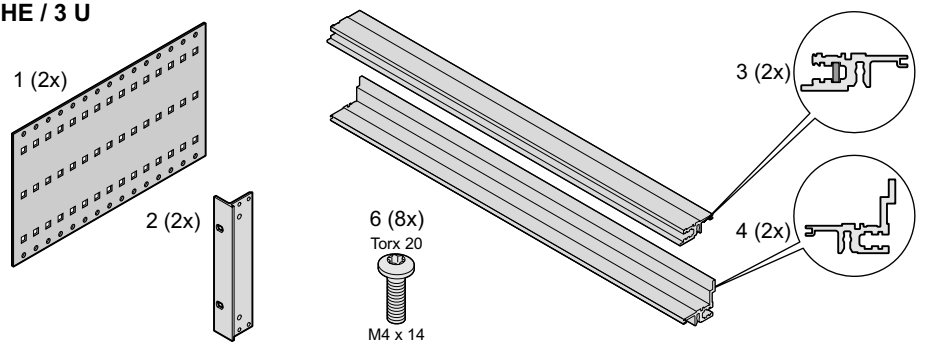

3 HE / 3 U

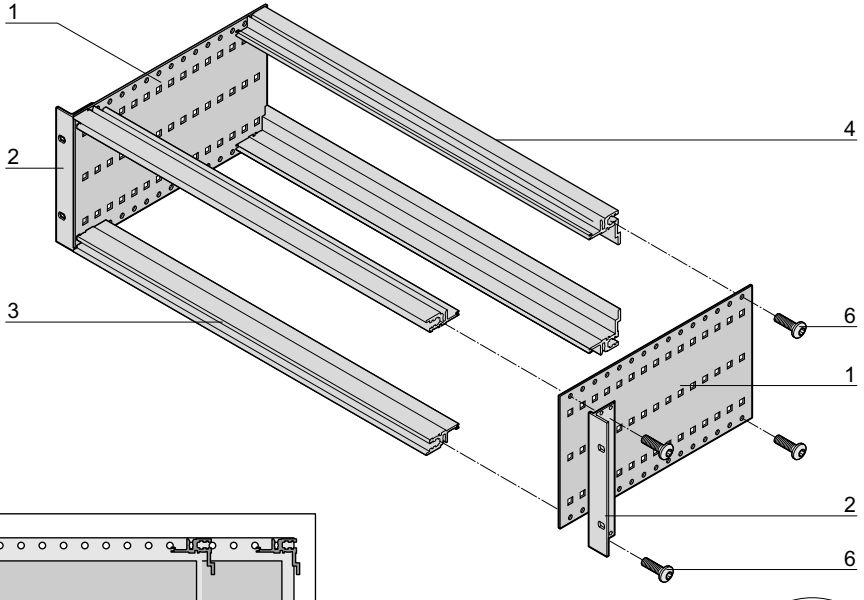

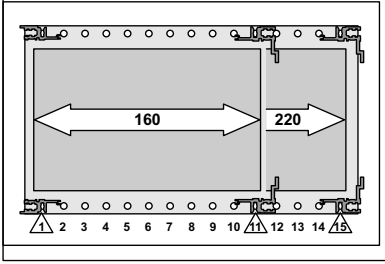



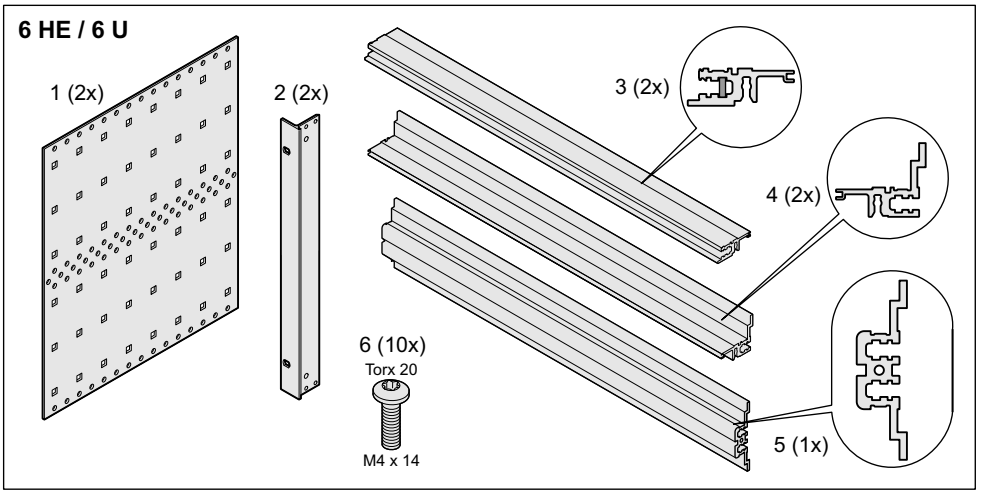
6 HE / 6 U
1 (2x)
2 (2x)
3 (2x)
4 (2x)
5 (1x)
6 (10x)
Torx 20
M4 x 14

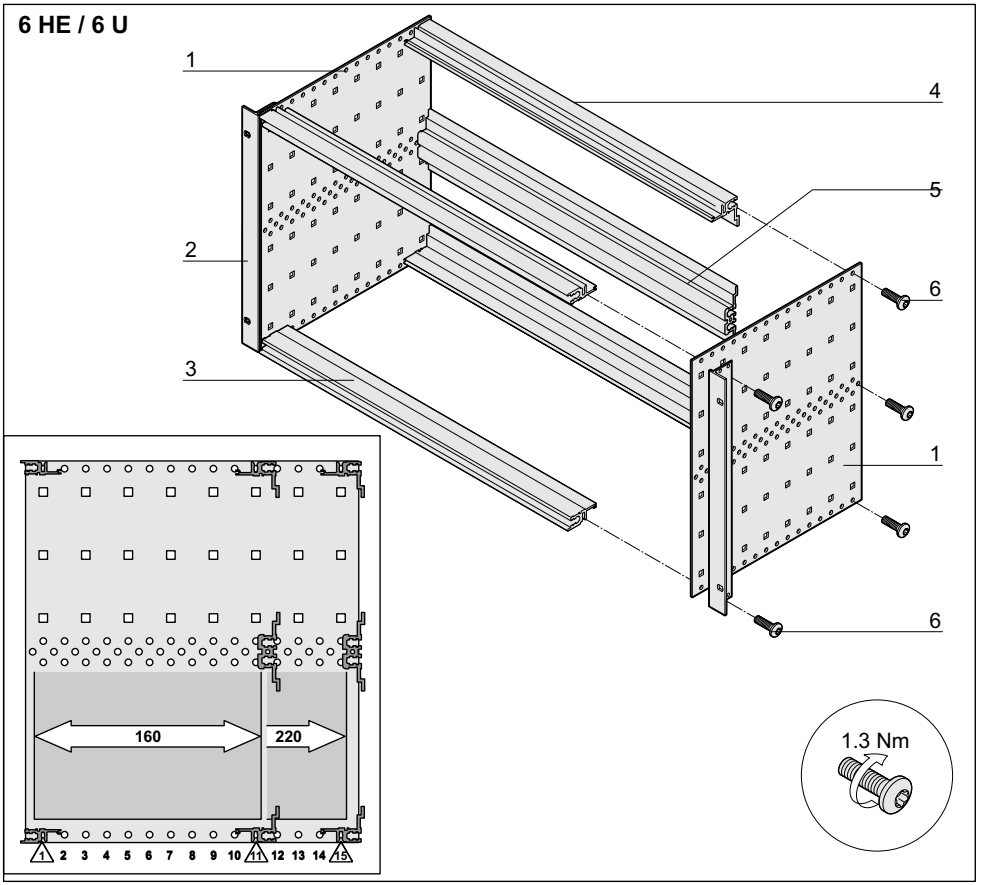
6 HE / 6 U
1
2
3
4
5
6
6
1
160
220
1 2 3 4 5 6 7 8 9 10 11 12 13 14 15
1.3 Nm