# Voltage monitoring in 3-phase mains

**K3PF400VSY02**

Monitoring relays - KAPPA series

Monitoring of phase sequence and phase failure

Monitoring of asymmetry

Optional connection of neutral wire

Supply voltage = measuring voltage

2 change over contacts

Plug-in housing

Width 38mm




Read and understand these instructions before installing, operating or maintaining the equipment.

Danger!
Never carry out work on live parts! Danger of fatal injury! The product must not be used in case of obvious damage. To be installed by an authorized person.

## Technical data

**1. Functions**
Voltage monitoring in 3-phase mains, monitoring of phase sequence, phase failure and asymmetry with adjustable asymmetry and optional connection of neutral wire.

**2. Time ranges**

| | Adjustment range |
|---|---|
| Tripping delay: | fixed, approx. 100ms |

**3. Indicators**

| | |
|---|---|
| Green LED ON: | indication of supply voltage |
| Yellow LED ON/OFF: | indication of relay output |

**4. Mechanical design**
Self-extinguishing plastic housing, IP rating IP40
Mounted on screw terminal socket 11-pols in accordance with IEC 60067-1-18a (type R11x or PF-113BE/M)
Mounting position: any

**5. Input circuit**

| | |
|---|---|
| Supply voltage: | (= measuring voltage) |
| Pins: | (S10)-S5-S6-S7 / (N)-L1-L2-L3 |
| Rated voltage $U_N$: | see table ordering information or printing on the unit |
| Tolerance: | -30% to +30% of $U_N$ |
| Rated consumption: | 9VA (2W) |
| Rated frequency: | a.c. 48 to 63Hz |
| Duty cycle: | 100% |
| Reset time: | 500ms |
| Hold-up time: | - |
| Drop out voltage: | >20% of the supply voltage |
| Overvoltage category: | III (in accordance with IEC 60664-1) |
| Rated surge voltage: | 4kV |

**6. Output circuit**
2 potential free change over contacts

| | |
|---|---|
| Rated voltage: | 250V a.c. |
| Switching capacity: | 1250VA (5A / 250V a.c.) |
| Fusing: | 5A fast acting |
| Mechanical life: | 20 x $10^6$ operations |
| Electrical life: | 2 x $10^5$ operations at 1000VA resistive load |
| Switching frequency: | max. 6/min at 1000VA resistive load (in accordance with IEC 60947-5-1) |
| Overvoltage category: | III (in accordance with IEC 60664-1) |
| Rated surge voltage: | 4kV |

**7. Measuring circuit**

| | |
|---|---|
| Measuring variable: | 3(N)~, Sinus, 48 to 63Hz |
| Measuring input: | (= supply voltage) |
| Pins: | (S10)-S5-S6-S7 / (N)-L1-L2-L3 |
| Overload capacity: | determined by tolerance specified for supply voltage |
| Input resistance: | - |
| Asymmetry: | 5% ... 30% |
| Overvoltage category: | III (in accordance with IEC 60664-1) |
| Rated surge voltage: | 4kV |

**8. Accuracy**

| | |
|---|---|
| Base accuracy: | ±5% |
| Adjustment accuracy: | ≤5% |
| Repetition accuracy: | ±2% |
| Voltage influence: | - |
| Temperature influence: | ≤0.05% / °C |

**9. Ambient conditions**

| | |
|---|---|
| Ambient temperature: | -25 to +55°C |
| Storage temperature: | -25 to +70°C |
| Transport temperature: | -25 to +70°C |
| Relative humidity: | 15% to 85% (in accordance with IEC 60721-3-3 class 3K3) |
| Pollution degree: | 2 (in accordance with IEC 60664-1) |

## Functions

**Phase sequence monitoring**
When all the phases are connected in the correct sequence and the measured asymmetry is less than the fixed value, the output relay switches into on-position (yellow LED illuminated). When the phase sequence changes, the output relay switches into off-position (yellow LED not illuminated).

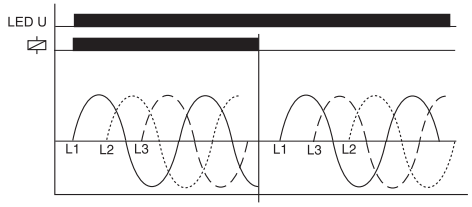


**Phase failure monitoring**
The output relay switches into off-position (yellow LED not illuminated), when one of the three phases fails.

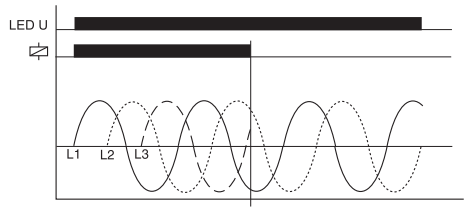


**Asymmetry monitoring**
The output relay R switches into off-position (yellow LED not illuminated) when the asymmetrie exceeds the value set at the ASYM-regulator. Reverse voltages of a consumer (e.g. a motor which continues to run on two phases only) do not effect the disconnection.

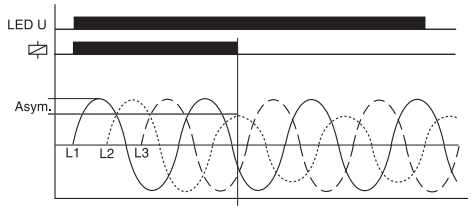


## Connections

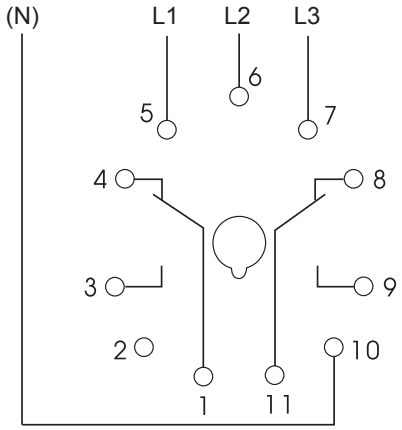


## Dimensions

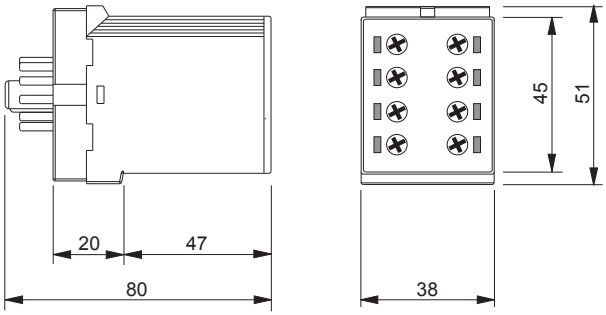


## Ordering Informations

| Types | Rated voltage $U_N$ | Switching thresholds $I_s$ | Part. No. |
|---|---|---|---|
| K3PF400VSY02 | 3(N)-400/230V | Asymmetrie: 5% ... 30% | 1380301 |