Pressure regulator, Series AS5-RGS

- G 3/4 G 1
- Qn = 14500 l/min
- Standard pressure regulator
- Activation Mechanical
- lockable
- for padlocks
- suitable for ATEX



Parts	Pressure regulator
Mounting orientation	Any
Certificates	suitable for ATEX
Working pressure min./max.	See table below
Ambient temperature min./max.	-10 ... 50 °C
Medium temperature min./max.	-10 ... 50 °C
Medium	Compressed air Neutral gases
Regulator type	Diaphragm-type pressure regulator Can be assembled into blocks
Regulator function	with relieving air exhaust
Adjustment range min./max.	See table below
Lock type	for padlocks
Pressure supply	single
Activation	Mechanical
Internal air consumption qv max.	1,5 l/min
Weight	See table below

Technical data

Part No.			Port	Flow Qn	Working pressure min./max.	Adjustment range min./max.
R412009101			G 3/4	14500 l/min	0,1 ... 16 bar	0,1 ... 1 bar
R412009103			G 3/4	14500 l/min	0,1 ... 16 bar	0,1 ... 2 bar
R412009105			G 3/4	14500 l/min	0,2 ... 16 bar	0,2 ... 4 bar
R412009107			G 3/4	14500 l/min	0,5 ... 16 bar	0,5 ... 8 bar
R412009109			G 3/4	14500 l/min	0,5 ... 16 bar	0,5 ... 10 bar
R412009111			G 3/4	14500 l/min	0,5 ... 16 bar	0,5 ... 16 bar
R412009100		–	G 3/4	14500 l/min	0,1 ... 16 bar	0,1 ... 1 bar
R412009102		–	G 3/4	14500 l/min	0,1 ... 16 bar	0,1 ... 2 bar
R412009104		–	G 3/4	14500 l/min	0,2 ... 16 bar	0,2 ... 4 bar
R412009106		–	G 3/4	14500 l/min	0,5 ... 16 bar	0,5 ... 8 bar
R412009108		–	G 3/4	14500 l/min	0,5 ... 16 bar	0,5 ... 10 bar
R412009110		–	G 3/4	14500 l/min	0,5 ... 16 bar	0,5 ... 16 bar
R412009113			G 1	14500 l/min	0,1 ... 16 bar	0,1 ... 1 bar
R412009115			G 1	14500 l/min	0,1 ... 16 bar	0,1 ... 2 bar
R412009117			G 1	14500 l/min	0,2 ... 16 bar	0,2 ... 4 bar
R412009119			G 1	14500 l/min	0,5 ... 16 bar	0,5 ... 8 bar
R412009121			G 1	14500 l/min	0,5 ... 16 bar	0,5 ... 10 bar
R412009123			G 1	14500 l/min	0,5 ... 16 bar	0,5 ... 16 bar
R412009112		–	G 1	14500 l/min	0,1 ... 16 bar	0,1 ... 1 bar

Part No.			Port	Flow Qn	Working pressure min./max.	Adjustment range min./max.
R412009114		–	G 1	14500 l/min	0,1 ... 16 bar	0,1 ... 2 bar
R412009116		–	G 1	14500 l/min	0,2 ... 16 bar	0,2 ... 4 bar
R412009118		–	G 1	14500 l/min	0,5 ... 16 bar	0,5 ... 8 bar
R412009120		–	G 1	14500 l/min	0,5 ... 16 bar	0,5 ... 10 bar
R412009122		–	G 1	14500 l/min	0,5 ... 16 bar	0,5 ... 16 bar

Part No.	Weight	
R412009101	0,997 kg	1)
R412009103	0,997 kg	1)
R412009105	0,997 kg	1)
R412009107	0,997 kg	1)
R412009109	0,997 kg	1)
R412009111	0,997 kg	1)
R412009100	0,905 kg	2)
R412009102	0,905 kg	2)
R412009104	0,905 kg	2)
R412009106	0,905 kg	2)
R412009108	0,905 kg	2)
R412009110	0,905 kg	2)
R412009113	0,997 kg	1)
R412009115	0,997 kg	1)
R412009117	0,997 kg	1)
R412009119	0,997 kg	1)
R412009121	0,997 kg	1)
R412009123	0,997 kg	1)
R412009112	0,905 kg	2)
R412009114	0,905 kg	2)
R412009116	0,905 kg	2)
R412009118	0,905 kg	2)
R412009120	0,905 kg	2)
R412009122	0,905 kg	2)

Nominal flow Qn with secondary pressure p2 = 6 bar at Δp = 1 bar

1) Pressure gauge enclosed separately, Suitable for use in Ex zones 1, 2, 21, 22.

2) Order pressure gauge separately, Suitable for use in Ex zones 1, 2, 21, 22.

Technical information

The pressure dew point must be at least 15 °C under ambient and medium temperature and may not exceed 3 °C .
The rear pressure gauge connection on the pressure regulator is closed with a blanking plug, the front connection is open. Depending on the customer application, a second blanking plug may be necessary. Please order separately (see accessories).
A change in the flow direction (from air supply on the left to air supply on the right) occurs by rotating installation by 180° about the vertical axis. Please see the operating instructions for further details.
Relieving exhaust (≤ 0.3 bar over set pressure).
With rear exhaust (> 3 bar).
Suitable for use in Ex zones 1, 2, 21, 22.

Technical information

Material	
Housing	Polyamide
Front plate	Acrylonitrile butadiene styrene
Seals	Acrylonitrile butadiene rubber
Threaded bushing	Die cast zinc

Dimensions

Dimensions

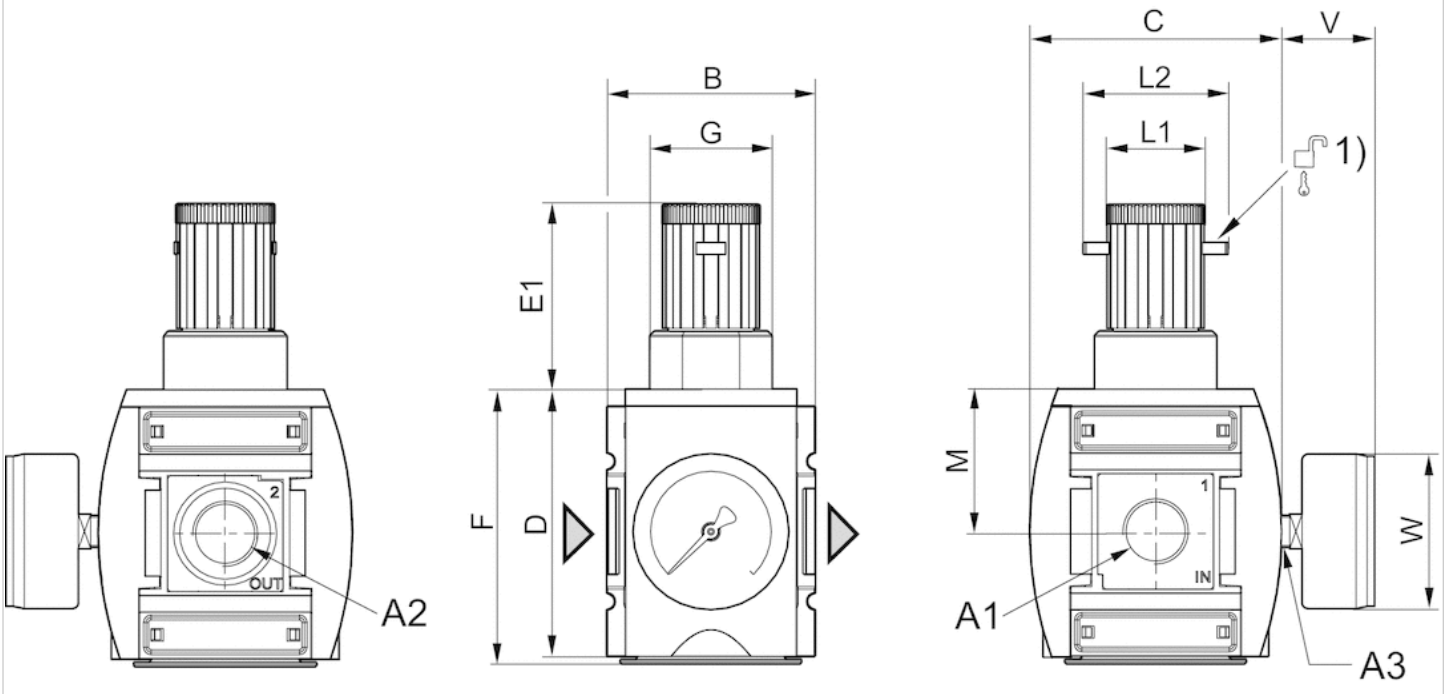

A1 = input

A2 = output
A3 = pressure gauge connection
1) Mounting option for padlocks, max. shackle Ø 8

Dimensions in mm

A1	A2	A3	B	C	D	E1	F	G	L1	L2	M	V	W
G 3/4	G 3/4	G 1/4	85	103	109	75	112	M50x1,5	41	60	58	38	63
G 1	G 1	G 1/4	85	103	109	75	112	M50x1,5	41	60	58	38	63

Diagrams

Pressure characteristics curve

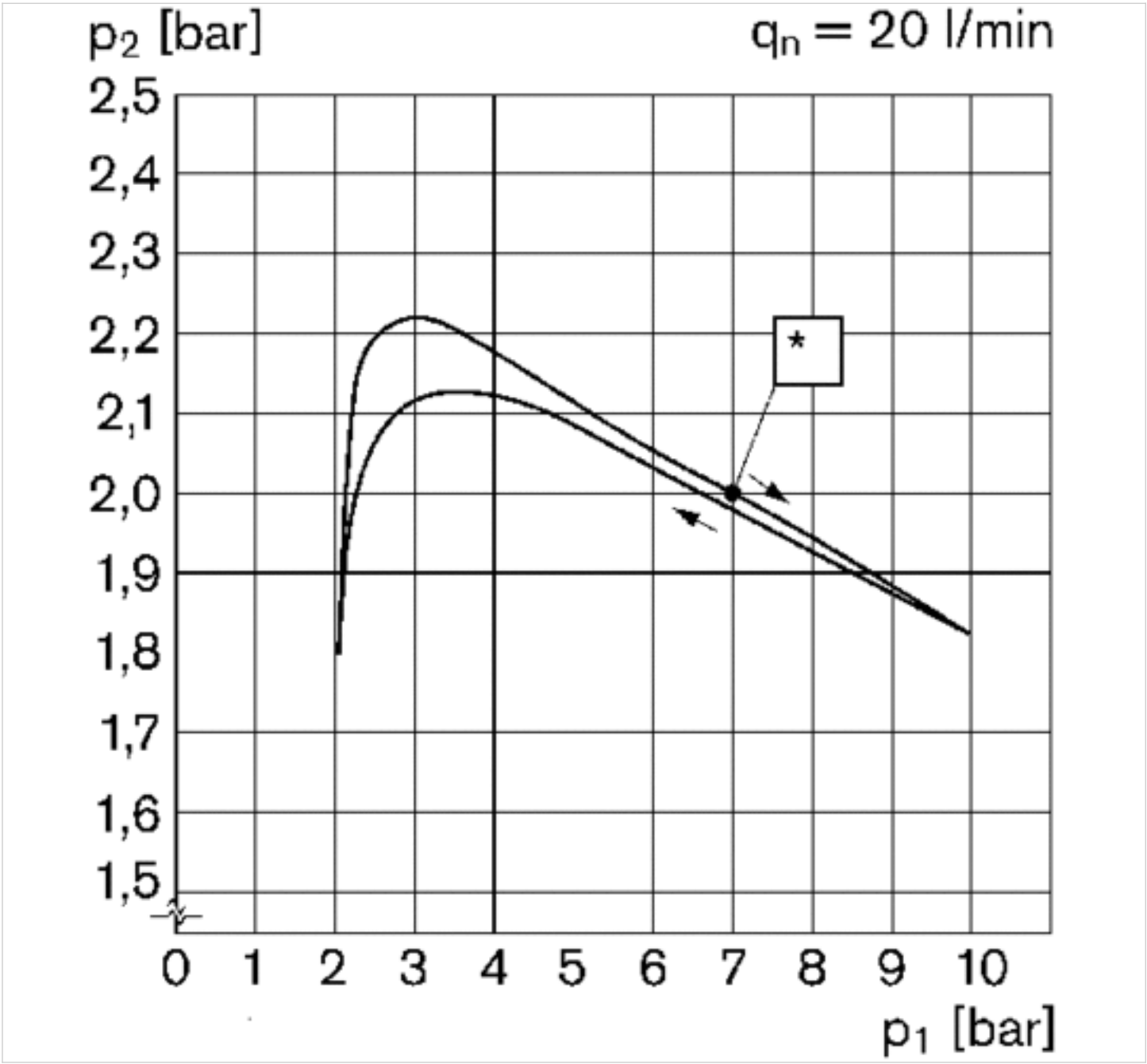

p1 = working pressure
p2 = secondary pressure

qn = nominal flow
* starting point

Flow rate characteristic (setting range p2: 0.5 - 8 bar)

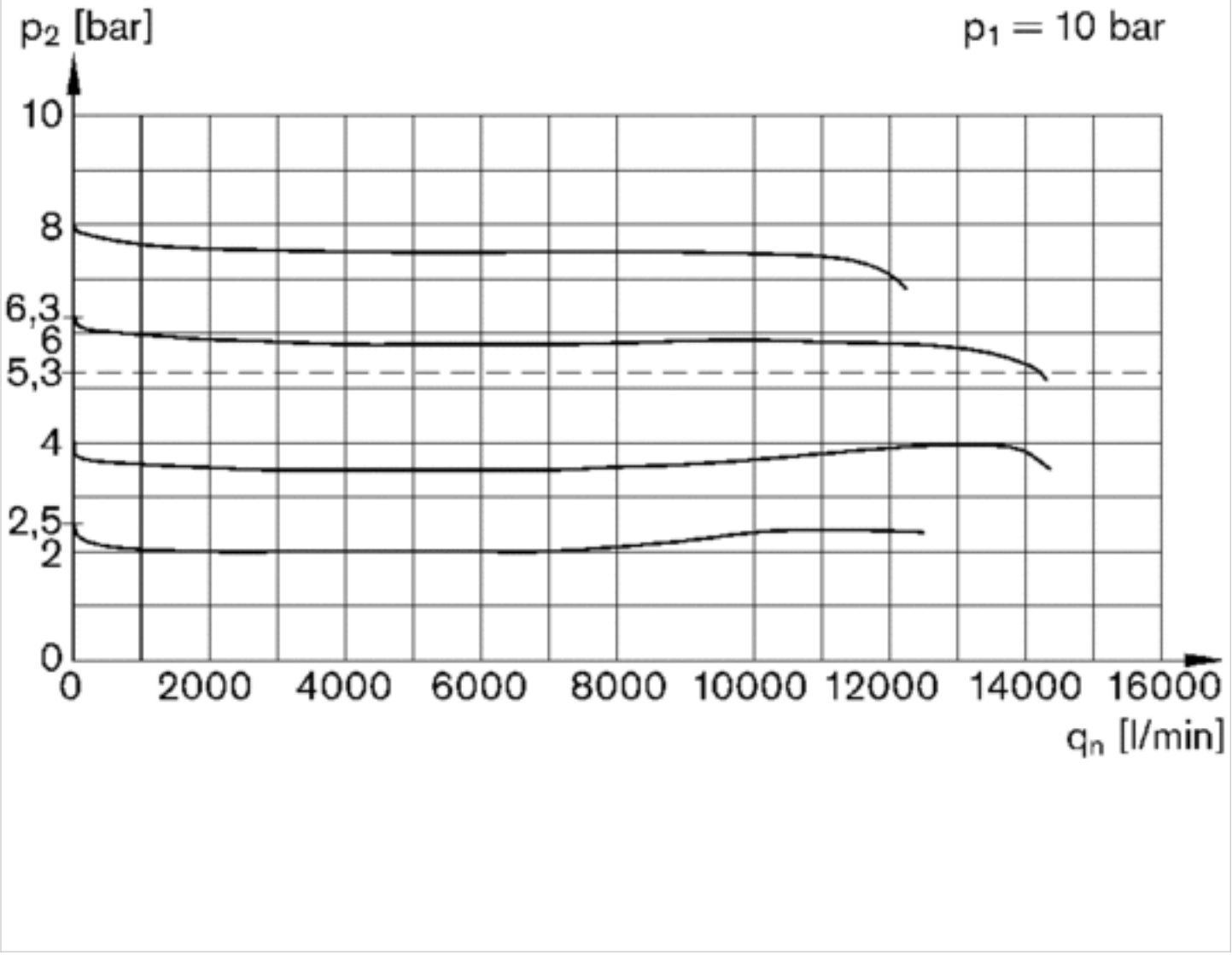

p1 = working pressure
p2 = secondary pressure
qn = nominal flow

Accessories overview

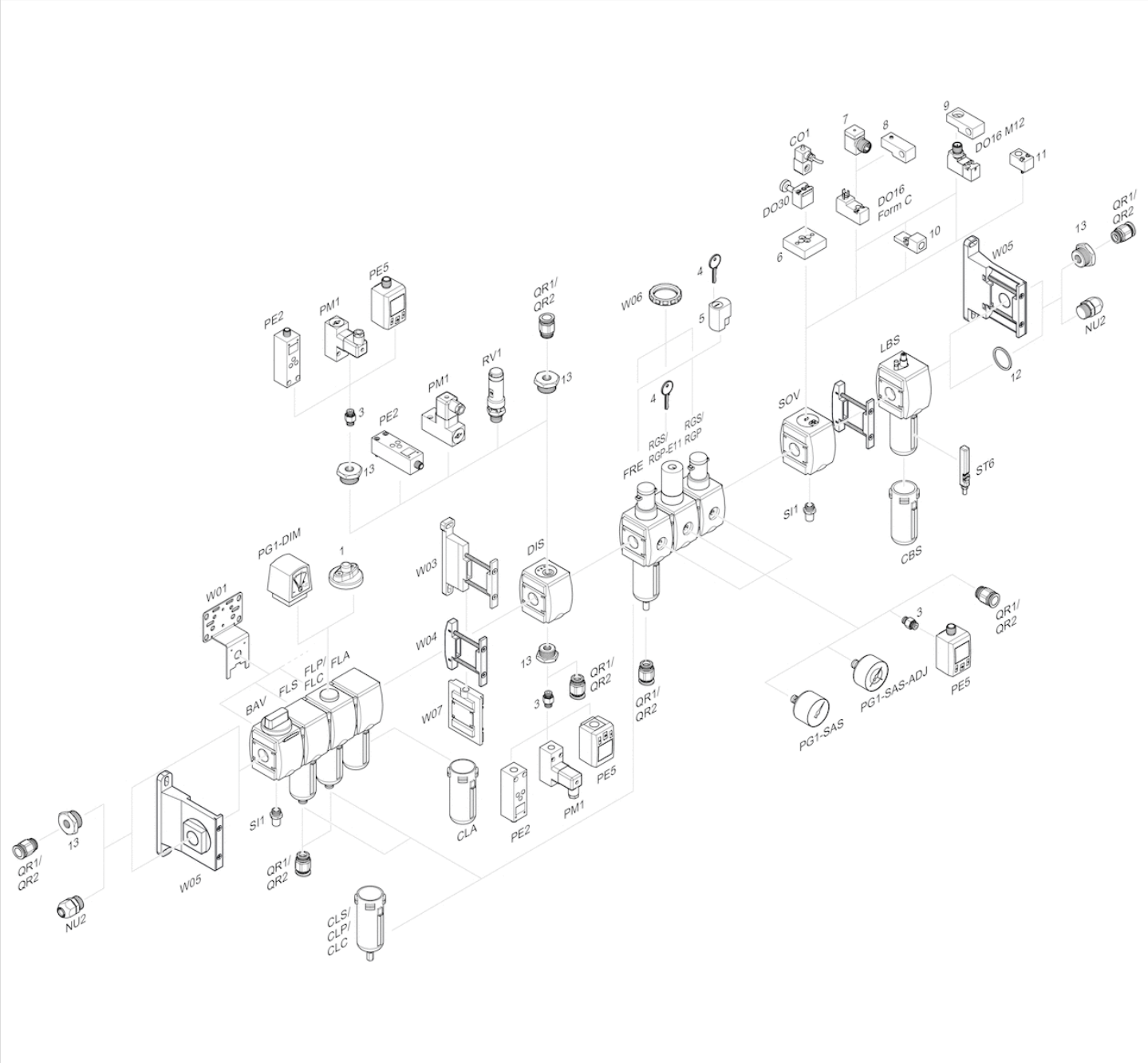

1 = contamination display
3 = Double nipple
4 = Key for E11 locking
5 = mortise lock
6 = Transition plate DO30
7 = Adapter, Series CON-VP
8 = Mounting aid DO16, form C
9 = Mounting aid DO16, M12
10 = Adapter for external pilot air
11 = Adapter pneumatic operation
12 = Sealing ring
13 = Reducing nipple

Efficient pneumatic solutions, our program: cylinders and drives, valves and valve systems, air supply management



Visit us: Emerson.com/Aventics

Your local contact: Emerson.com/contactus

Emerson.com

Facebook.com/EmersonAutomationSolutions

LinkedIn.com/company/Emerson-Automation-Solutions

Twitter.com/EMR_Automation

An example configuration is depicted on the title page. The delivered product may thus vary from that in the illustration. Subject to change. This Document, as well as the data, specifications and other information set forth in it, are the exclusive property of AVENTICS GmbH. It may not be reproduced or given to third parties without its consent. Only use the AVENTICS products shown in industrial applications. Read the product documentation completely and carefully before using the product. Observe the applicable regulations and laws of the respective country. When integrating the product into applications, note the system manufacturer's specifications for safe use of the product. The data specified only serve to describe the product. No statements concerning a certain condition or suitability for a certain application can be derived from our information. The information given does not release the user from the obligation of own judgement and verification. It must be remembered that the products are subject to a natural process of wear and aging.

The Emerson logo is a trademark and service mark of Emerson Electric Co. Brand logotype are registered trademarks of one of the Emerson family of companies. All other marks are the property of their respective owners. © 2021 Emerson Electric Co. All rights reserved.
2021-05

EMERSON

CONSIDER IT SOLVED™