sferaco
VALVES & FITTINGS

REF. 202-203-210

BRONZE Y STRAINER





Size :	DN 3/8" to 4"
Ends :	Female BSP
Min Temperature :	- 10°C
Max Temperature :	+ 120°C
Max Pressure :	16 Bars up to DN 2“
Specifications :	Removable stainless steel filter Female / Female
Materials :	Bronze body

BRONZE Y STRAINER

SPECIFICATIONS :

- Removable stainless steel filter
- Female / female type
- Horizontal or vertical position with descendant fluid (respect the flow direction indicated by the arrow)
- For 202 type, Mesh 4/10° mm (400 µ) up to DN 1“ and 5/10° mm (500 µ) over
- For 203 and 210 types, Mesh 3/10° mm (300 µ)
- With drainer threaded female BSP with butterfly aluminium handle for 210 type

USE :

- Water distribution and watering
- Min Temperature Ts : - 10°C
- Max Temperature Ts :+ 120°C
- Max Pressure Ps : 16 bars up to DN 2“ , 10 bars over

HEAD LOSS GRAPH :

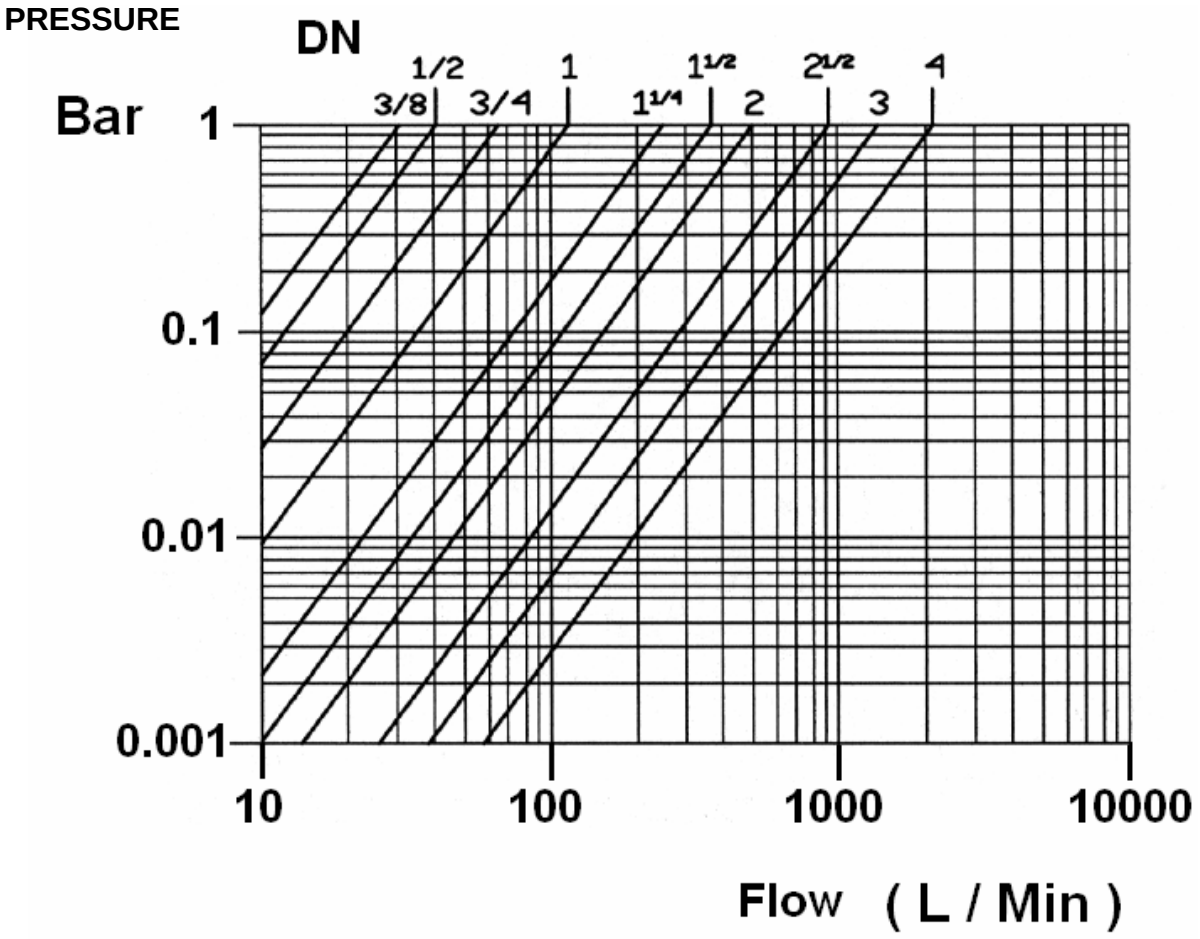

Information provided as an indication and subject to possible modification

BRONZE Y STRAINER

RANGE :

- Strainer threaded female BSP cylindric from DN 3/8“ to DN 4“ for **Ref. 202** et **203**
- Strainer with drain threaded female BSP cylindric from DN 1/2“ to DN 2“ for **Ref. 210**

MATERIALS :

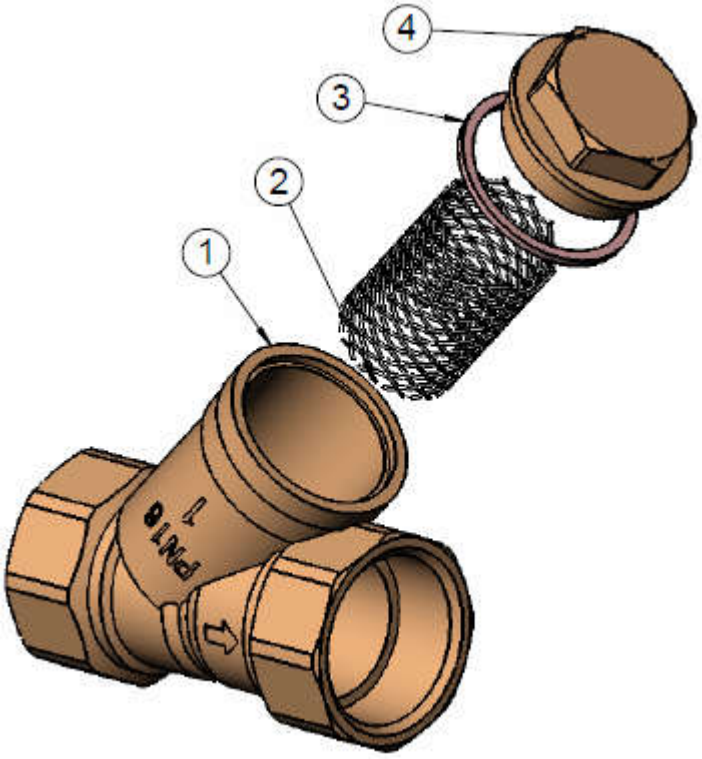

Item	Designation	Materials
1	Body	Bronze
2	Filter	SS 304
3	Gasket	PTFE (60%) + Bronze (40%)
4	Cap	Brass

Information provided as an indication and subject to possible modification

BRONZE Y STRAINER

SIZE TYPES 202 AND 203 (in mm) :

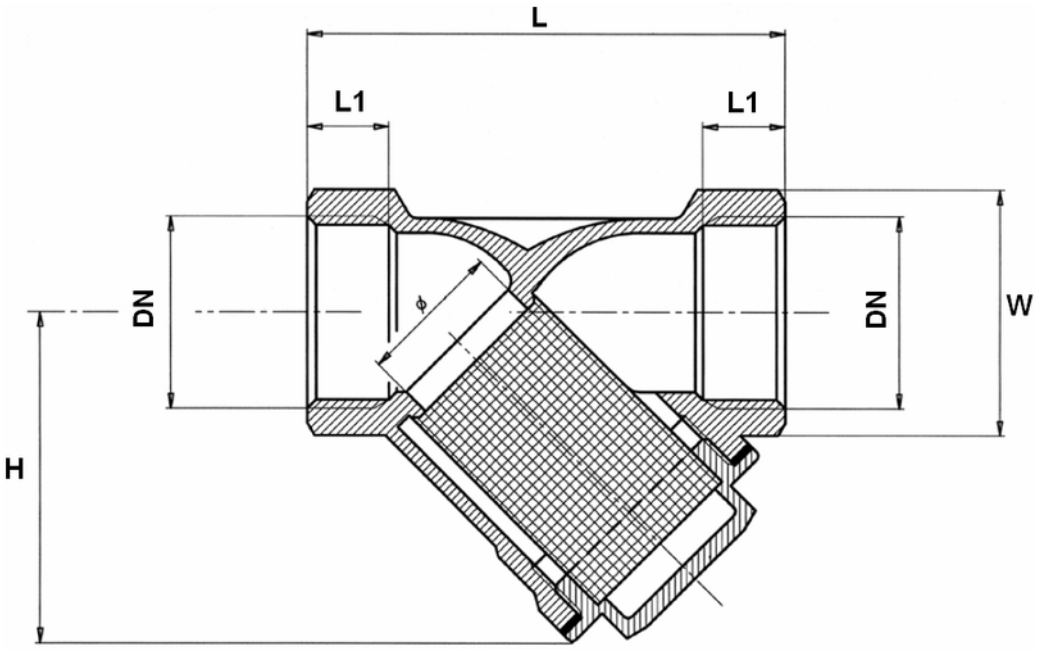

Filter size :

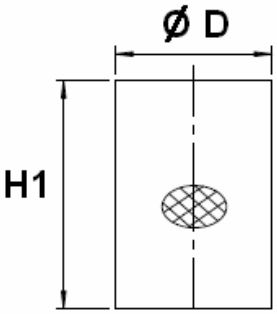

	DN	3/8"	1/2"	3/4"	1"	1"1/4	1"1/2	2"	2"1/2	3“	4“
Ref. 202 - 203	Ø	12	15	20	25	32	40	50	65	78	98
	L	55	59	69	82	99	109	131	151	172	219
	L1	10	11	12	14	17	17	19	21	21	24
	H	40	44	50.5	60	73	80	98	114	130	170
	W	22	26	32	38	48	52	66	82	96	124
	Ø D	18	20	25	31	37	43	58	65	75	100
	H1	30	32	39	46	55	61	76	90	106	140
	Weight (Kg)	0.18	0.22	0.34	0.475	0.72	0.9	1.58	2.45	3.4	7.06

Information provided as an indication and subject to possible modification

BRONZE Y STRAINER

SIZE TYPE 210 (in mm) :

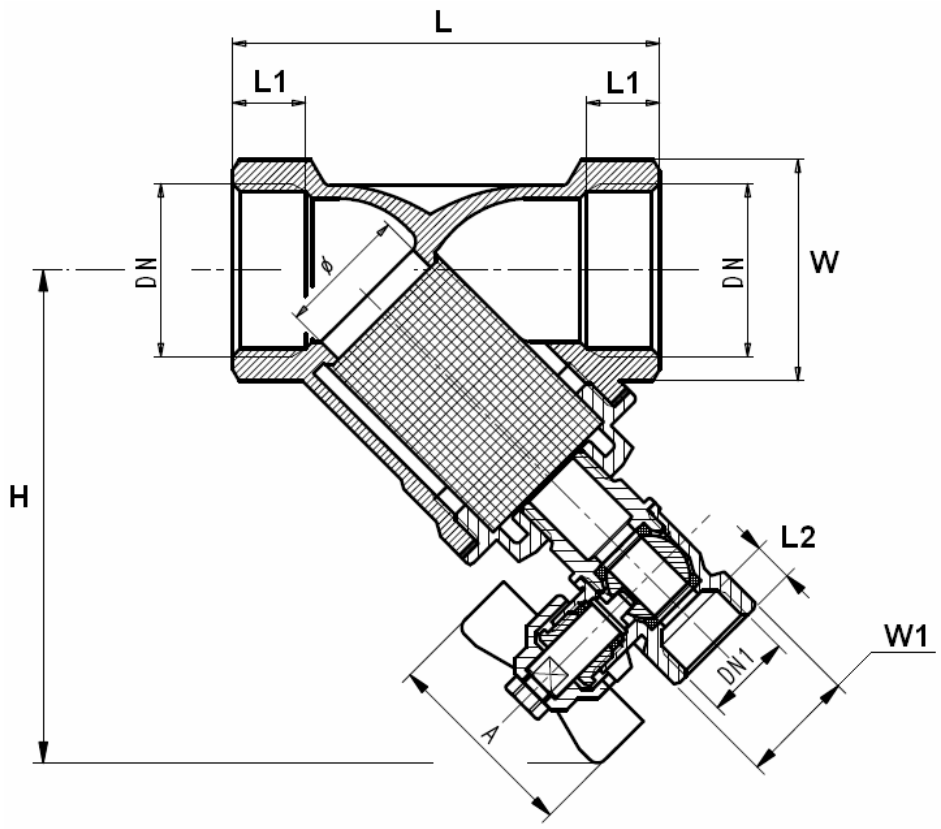

Filter size :

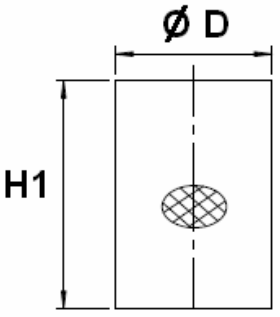

	DN	1/2"	3/4"	1"	1"1/4	1"1/2	2"
Ref. 210	DN1	1/4“	3/8“	3/8“	3/8“	3/8“	3/8“
	L	59	69	82	117.5	128	150
	L1	11	12	14	17	17	19
	L2	8.5	7.5	7.5	11.5	11.5	11.5
	H	44	85	94.5	73	80	98
	A	38	38	38	50	50	50
	Ø D	20	25	31	37	43	58
	H1	32	39	46	55	61	76
	W	26	32	38	48	52	66
	W1	20	20	20	20	20	20
	Weight (Kg)	0.32	0.42	0.54	0.88	1.05	1.68

BRONZE Y STRAINER

STANDARDS :

- Fabrication according to ISO 9001 : 2008
- DIRECTIVE 97/23/CE : Products excluded from directive (Article 1, § 3.2)
- French water agreement **A.C.S. N° 09 ACC LY 157**
- English water agreement **WRAS**
- Threaded female BSP cylindric according to ISO 228/1

INSTALLATION POSITIONS :

Vertical position (descendand fluid)

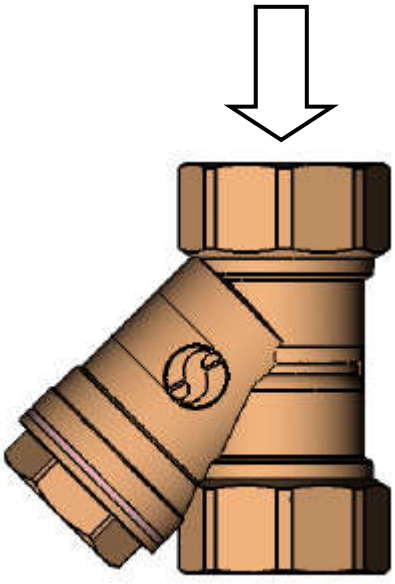

Horizontal position

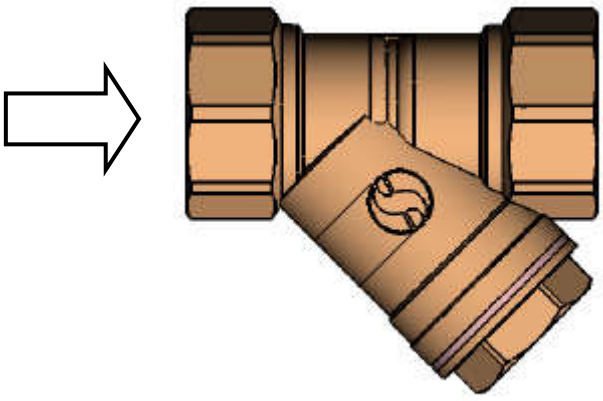

ADVICE : Our opinion and our advice are not guaranteed and SFERACO shall not be liable for the consequences of damages.
The customer must check the right choice of the products with the real service conditions.

Information provided as an indication and subject to possible modification

BRONZE Y STRAINER

INSTALLATION INSTRUCTIONS

GENERAL GUIDELINES :

- Ensure that the strainers to be used are appropriate for the conditions of the installation (type of fluid,pressure and temperature).
- Be sure to have enough valves to be able to isolate the sections of piping as well as the appropriate equipment for maintenance and repair.
- Ensure that the strainers to be installed are of correct strenght to be able to support the capacity of their usage.
- **Installation of all circuits should ensure that their function can be automatically tested on a regular basis (at least two times a year).**

INSTALLATION INSTRUCTIONS :

- **Before installing the strainers, clean and remove any objects from the pipes** (in particular bits of sealing and metal) which could obstruct and block the strainers.
- **Ensure that both connecting pipes either side of the strainer (upstream and downstream) are aligned (if they're not, the strainer may not work correctly).**
- **Make sure that the two sections of the pipe (upstream and downstream) match, the strainer unit will not absorb any gaps. Any distortions in the pipes may affect the thightness of the connection, the working of the strainer and can even cause a rupture.** To be sure, place the kit in position to ensure the assembling will work.
- The theoretical lengths given by ISO/R7 for the tapping are typically longer than required, the length of the thread should be limited, and **check that the end of the tube does not press right up to the head of the thread.**
- **Never use a vice to tighten the fixings of the strainer.**
- **If sections of piping do not have their final support in place, they should be temporarily fixed. This is to avoid unnecessary strain on the strainer.**
- **Fluids in the strainer must not contain solid objects (it could damaged the seat).**

Information provided as an indication and subject to possible modification