Long-reach leg outside puller



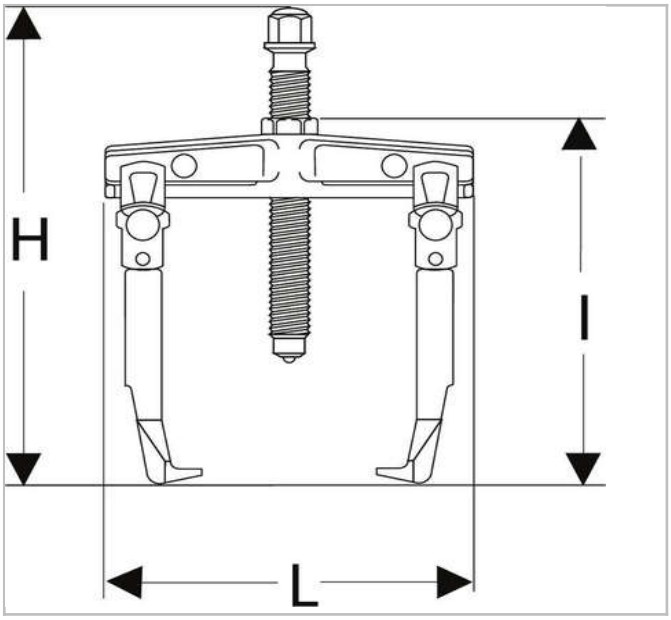

Description:

● Safety: legs locked in position on the bearing using the central nut. No risk for the puller to escape from the bearing.
● Shear pin: the pin shears if torque limit is exceeded. Supplied with 2 spare pins.
● Set of 3 spare pins. U.306-24J3.
● Fitted with the anti-rotation bush U.20-12. The button protects the screw when a bar is used to block puller rotation.
● Adaptable puller accessory: slide hammer U.2.

© FACOM 2020

	Depth Maxi [mm]	Length L [mm]	Height H [mm]	C Mini - Maxi [mm]	Length [mm]	Legs_Multi [']	Screw Size [']	Screw Size Multi [mm]	Tonnes [']	t [']	Weight [Kg]
U.20 B	220.0	125.0	370.0	25 - 260	325.0	U.20BSE4	U.20-B1S	24.0	7.0	70.0	4.3

© FACOM 2020