Datamet









Datamet Wall Mount Enclosures

Modern aluminium enclosures designed for indoor applications. Provide total access to the electronics during installation on the wall. Stylish design with die-cast front bezel, top cover and 'L' shape rear panel. Front panels and internal mounting plates ordered separately.

Datamet Wandgehäuse

Moderne Aluminium-Gehäuse für Innenanwendungen. Elektronik während der Wandinstallation frei zugänglich. Elegantes Design mit Zink-Druckguss Frontrahmen, Haube und Rückplatte in L-Form. Front- und Montageplatten als Zubehör.

Boîtiers Muraux Datamet

Des boîtiers en aluminium modernes pour des applications d'intérieur. Accès à l'électronique sans barrière pendant l'installation au mur. Design élégant avec bandeaux frontaux, partie supérieure et panneau arrière en forme L moulés sous pression. Panneaux frontaux et plaques internes à commander séparément.

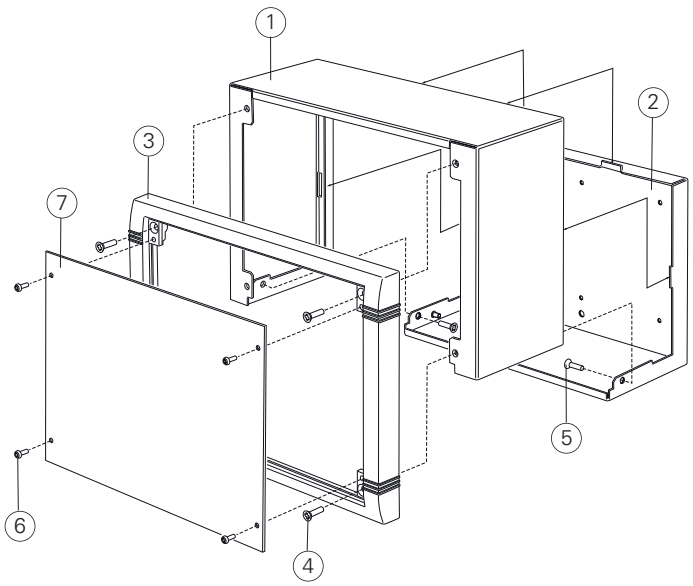

	Supply	Lieferumfang	Fourniture
1	Top cover	Oberteil	Partie supérieure
2	Rear panel	Rückplatte	Plaque arrière
3	Front bezel	Frontrahmen	Cadre frontal
4	M4 x 16 mm (x4)	M4 x 16 mm (x4)	M4 x 16 mm (x4)
5	M4 x 6 mm (x2)	M4 x 6 mm (x2)	M4 x 6 mm (x2)
6	M3 x 8 mm (x4)	M3 x 8 mm (x4)	M3 x 8 mm (x4)
7	*Front panel	*Frontplatten	*Plaque avant
	* Accessories	* Zubehör	* Accessoires

RAL 7035 | RAL 7040 | RAL 9005

Standard colours
Standardfarben
Coloris standard

Datamet

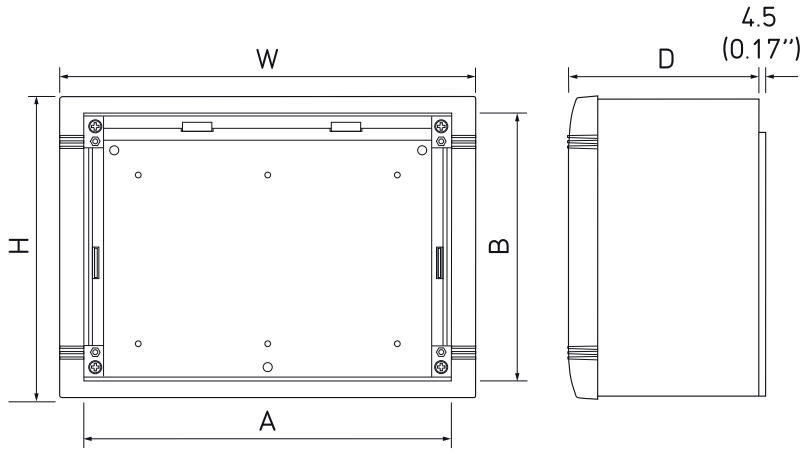

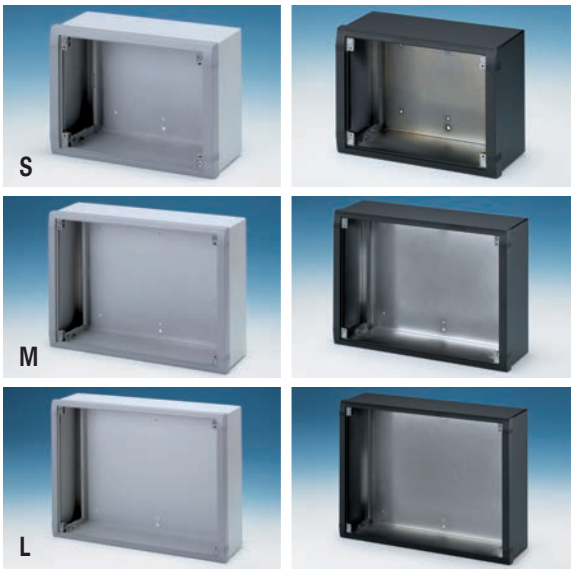

Part No. Bestell-Nr./Réf.	Version	W	H	D	A Front Panel	B Front Panel	Colours Farben/Coloris
M 58 25 105	S	250 (9.84")	180 (7.08")	116.5 (4.58")	220 (8.66")	159.5 (6.28")	RAL 7035/40
M 58 25 109	S	250 (9.84")	180 (7.08")	116.5 (4.58")	220 (8.66")	159.5 (6.28")	RAL 9005
M 58 35 105	M	350 (13.78")	250 (9.84")	116.5 (4.58")	320 (12.59")	229.5 (9.03")	RAL 7035/40
M 58 35 109	M	350 (13.78")	250 (9.84")	116.5 (4.58")	320 (12.59")	229.5 (9.03")	RAL 9005
M 58 40 105	L	400 (15.74")	300 (11.81")	116.5 (4.58")	370 (14.56")	279.5 (11.00")	RAL 7035/40
M 58 40 109	L	400 (15.74")	300 (11.81")	116.5 (4.58")	370 (14.56")	279.5 (11.00")	RAL 9005

Front Panel

Frontplatte
Plaque Avant

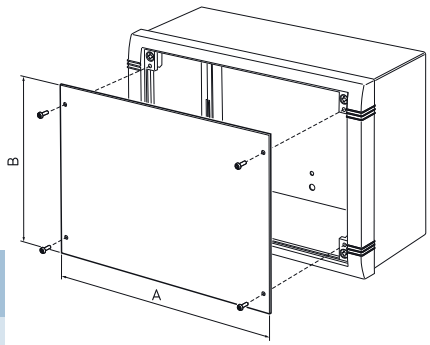



Part No. Bestell-Nr./Réf.	Version	A	B
M 58 00 025	S	220 (8.66")	159.5 (6.28")
M 58 00 035	M	320 (12.59")	229.5 (9.03")
M 58 00 040	L	370 (14.56")	279.5 (11.00")

Mounting Plate Kit

Montageplatten-Set
Kit De Plaque Support

Supply: Mounting plate +(1)x 6 +(2)x 12
Lieferumfang: Montageplatte +(1)x 6 +(2)x 12
Fourniture: Plaque support +(1)x 6 +(2)x 12

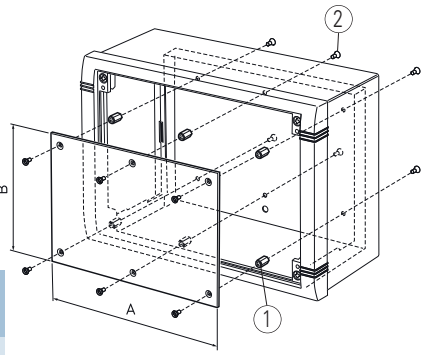



Part No. Bestell-Nr./Réf.	Version	A	B
M 58 04 125	S	175 (6.89")	120 (4.72")
M 58 04 135	M	275 (10.82")	190 (7.48")
M 58 04 140	L	325 (12.79")	240 (9.44")