Protistor® size NH 000, 00, 1, 2, 3 gS

690VAC

SEMICONDUCTOR PROTECTION FUSES

NH SQUARE BODY HIGH-SPEED FUSE-LINKS AC PROTECTION



The 690/700V Protistor® fuse-links provide maximum flexibility in equipment design and ultimate protection for today's power conversion equipment. These NH style fuse-links are defined as per DIN 43620/00 for a worldwide acceptance into NH modular system fuse-holders, fuse switch disconnectors for direct installation.

The Protistor® have been engineered to provide state-of-the-art protection for semiconductors: diodes, thyristors, GTO's and IGBT devices. Fuses are assembled with pure silver, die-cut elements embedded in solidified sand, which helps control arcing characteristics for a lower I^2t and high interrupting rating level. All contact surfaces are silver plated and all hardware is non-magnetic.

Each fuse-link can be equipped with a low voltage trip-indicator which can operate a field mountable microswitch.

TECHNICAL DATA OVERVIEW

Rated Voltage	690/700VAC
Ampere Range (A)	16 ... 630 A
Size per Standard	NH 000, 00, 1, 2, 3
Speed/Characteristic	gS
I.R. AC (IEC)	160 kA

FEATURES & BENEFITS

- Multiple body sizes
- gS Class according to IEC 60269-4
- Low I^2t for improved semiconductor protection
- Fast acting
- Highly current limiting
- Excellent cycling capability
- Reduced power dissipation
- No derating in standard NH fusegear
- High widstanding against inrush current and overloads

APPLICATIONS

- Protection of inverters, motor drives, UPS systems and similar 700V or less equipments.

STANDARDS

- IEC 60269-4 Compliance
- UL/CSA Recognized Component
- CCC GB 1359.4

MERSEN reserves the right to change, update or correct, without notice, any information contained in this datasheet.

PRODUCT RANGE



NH000GS69V25PV

Size 000 gS 690VAC

Catalog number	Item number	Rated voltage AC (IEC)	Rated voltage AC (UL)	Rated current I_n	Pre-arcing I^2t	Clearing I^2t at Rated Voltage	Rated breaking capacity AC	Power dissipation at I_n	Package	Weight
NH000GS69V16PV	N322035	690 V	700 V	16 A	9 A²s	45 A²s	160 kA	5 W	3	0.13 kg
NH000GS69V20PV	Q322037	690 V	700 V	20 A	10 A²s	54 A²s	160 kA	6 W	3	0.13 kg
NH000GS69V25PV	S322039	690 V	700 V	25 A	18 A²s	96 A²s	160 kA	7 W	3	0.13 kg
NH000GS69V32PV	X322043	690 V	700 V	32 A	39 A²s	218 A²s	160 kA	8 W	3	0.13 kg
NH000GS69V40PV	B322047	690 V	700 V	40 A	69 A²s	386 A²s	160 kA	9 W	3	0.13 kg
NH000GS69V50PV	F322051	690 V	700 V	50 A	136 A²s	764 A²s	160 kA	10 W	3	0.13 kg
NH000GS69V63PV	K322055	690 V	700 V	63 A	275 A²s	1545 A²s	160 kA	11 W	3	0.13 kg
NH000GS69V80PV	P322059	690 V	700 V	80 A	543 A²s	3055 A²s	160 kA	13 W	3	0.13 kg
NH000GS69V100PV	T322063	690 V	700 V	100 A	1063 A²s	5982 A²s	160 kA	14 W	3	0.13 kg



NH00GS69V125PV

Size 00 gS 690VAC

Catalog number	Item number	Rated voltage AC (IEC)	Rated voltage AC (UL)	Rated current I_n	Pre-arcing I^2t	Clearing I^2t at Rated Voltage	Rated breaking capacity AC	Power dissipation at I_n	Package	Weight
NH00GS69V125PV	E322165	690 V	700 V	125 A	2170 A²s	10850 A²s	160 kA	16 W	3	0.2 kg
NH00GS69V160PV	J322169	690 V	700 V	160 A	4270 A²s	21340 A²s	160 kA	19 W	3	0.2 kg



NH1GS69V125PV

Size 1 gS 690VAC

Catalog number	Item number	Rated voltage AC (IEC)	Rated voltage AC (UL)	Rated current I_n	Pre-arcing I^2t	Clearing I^2t at Rated Voltage	Rated breaking capacity AC	Power dissipation at I_n	Package	Weight
NH1GS69V100PV	V322363	690 V	700 V	100 A	965 A²s	4820 A²s	160 kA	19 W	3	0.43 kg
NH1GS69V125PV	X322365	690 V	700 V	125 A	1705 A²s	8550 A²s	160 kA	21 W	3	0.43 kg
NH1GS69V160PV	B322369	690 V	700 V	160 A	3860 A²s	19000 A²s	160 kA	23 W	3	0.43 kg
NH1GS69V200PV	D322371	690 V	700 V	200 A	7560 A²s	38000 A²s	160 kA	26 W	3	0.43 kg
NH1GS69V250PV	H322375	690 V	700 V	250 A	15420 A²s	77150 A²s	160 kA	29 W	3	0.43 kg
NH1GS69V280PV	L302897	690 V	700 V	280 A	18665 A²s	93000 A²s	160 kA	33 W	3	0.43 kg

MERSEN reserves the right to change, update or correct, without notice, any information contained in this datasheet.

PRODUCT RANGE



NH2GS69V250PV

Size 2 gS 690VAC

Catalog number	Item number	Rated voltage AC (IEC)	Rated voltage AC (UL)	Rated current I_n	Pre-arcing I^2t	Clearing I^2t at Rated Voltage	Rated breaking capacity AC	Power dissipation at I_n	Package	Weight
NH2GS69V160PV	K322469	690 V	700 V	160 A	3460 A²s	17500 A²s	160 kA	28 W	3	0.64 kg
NH2GS69V200PV	M322471	690 V	700 V	200 A	6870 A²s	34000 A²s	160 kA	30 W	3	0.64 kg
NH2GS69V250PV	R322475	690 V	700 V	250 A	12485 A²s	62000 A²s	160 kA	33 W	3	0.64 kg
NH2GS69V315PV	W322479	690 V	700 V	315 A	27945 A²s	140000 A²s	160 kA	36 W	3	0.64 kg
NH2GS69V350PV	X322480	690 V	700 V	350 A	38310 A²s	191000 A²s	160 kA	38 W	3	0.64 kg
NH2GS69V400PV	A322483	690 V	700 V	400 A	54320 A²s	271000 A²s	160 kA	41 W	3	0.64 kg
NH2GS69V450PV	C322485	690 V	700 V	450 A	81125 A²s	405000 A²s	160 kA	43 W	3	0.64 kg



NH3GS69V315PV

Size 3 gS 690VAC

Catalog number	Item number	Rated voltage AC (IEC)	Rated voltage AC (UL)	Rated current I_n	Pre-arcing I^2t	Clearing I^2t at Rated Voltage	Rated breaking capacity AC	Power dissipation at I_n	Package	Weight
NH3GS69V250PV	R322590	690 V	700 V	250 A	9690 A²s	48000 A²s	160 kA	39 W	1	1.05 kg
NH3GS69V315PV	E322579	690 V	700 V	315 A	19525 A²s	97000 A²s	160 kA	42 W	1	1.05 kg
NH3GS69V350PV	F322580	690 V	700 V	350 A	28135 A²s	140000 A²s	160 kA	44 W	1	1.05 kg
NH3GS69V400PV	J322583	690 V	700 V	400 A	42050 A²s	210000 A²s	160 kA	47 W	1	1.05 kg
NH3GS69V450PV	L322585	690 V	700 V	450 A	58675 A²s	293000 A²s	160 kA	50 W	1	1.05 kg
NH3GS69V500PV	N322587	690 V	700 V	500 A	87030 A²s	435100 A²s	160 kA	52 W	1	1.05 kg
NH3GS69V550PV	P322588	690 V	700 V	550 A	111810 A²s	559000 A²s	160 kA	56 W	1	1.05 kg
NH3GS69V630PV	Q322589	690 V	700 V	630 A	149950 A²s	749000 A²s	160 kA	63 W	1	1.05 kg

MERSEN reserves the right to change, update or correct, without notice, any information contained in this datasheet.

TIME CURRENT CHARACTERISTIC CURVES

Size 000

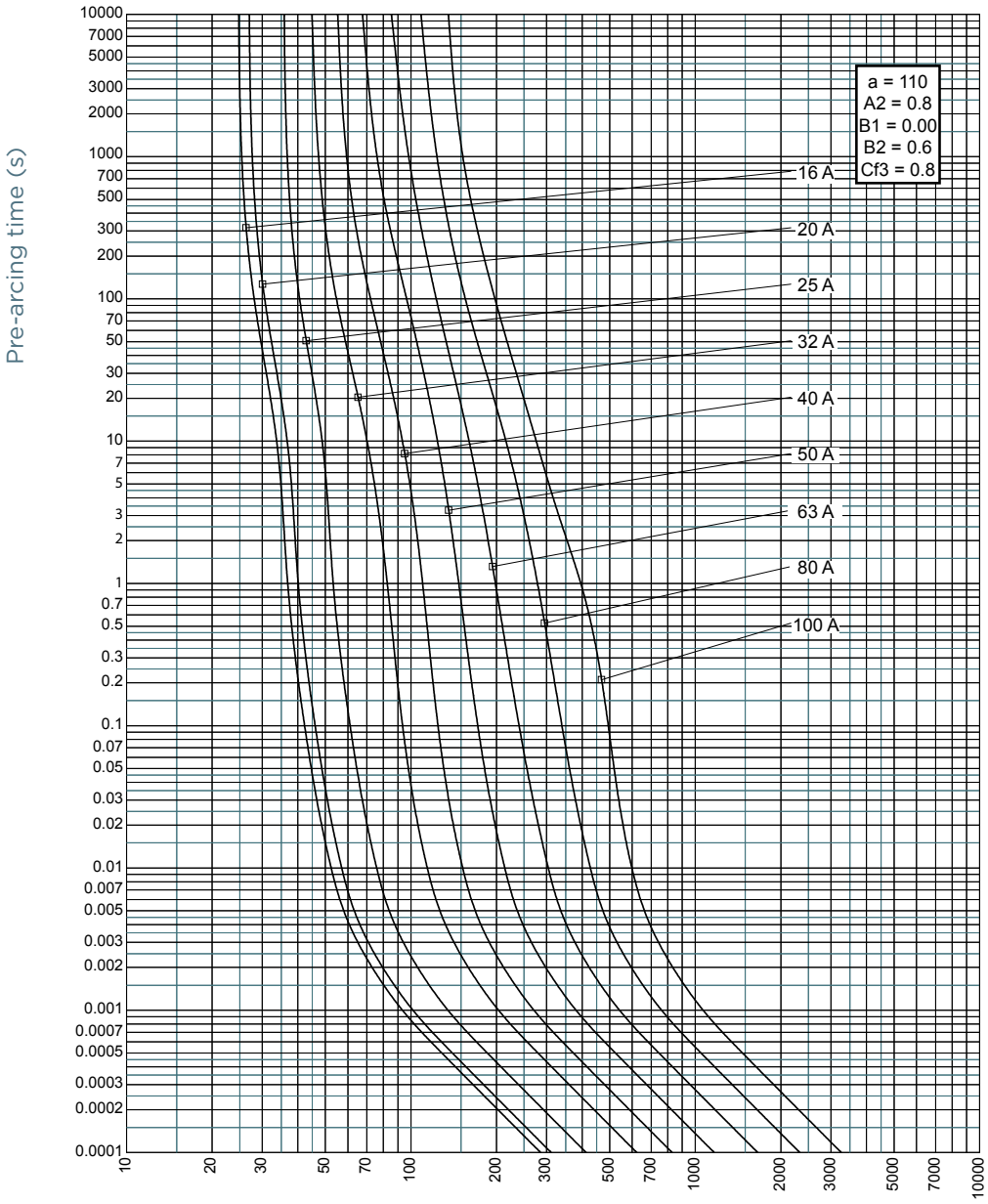

MERSEN reserves the right to change, update or correct, without notice, any information contained in this datasheet.

TIME CURRENT CHARACTERISTIC CURVES

Size 00

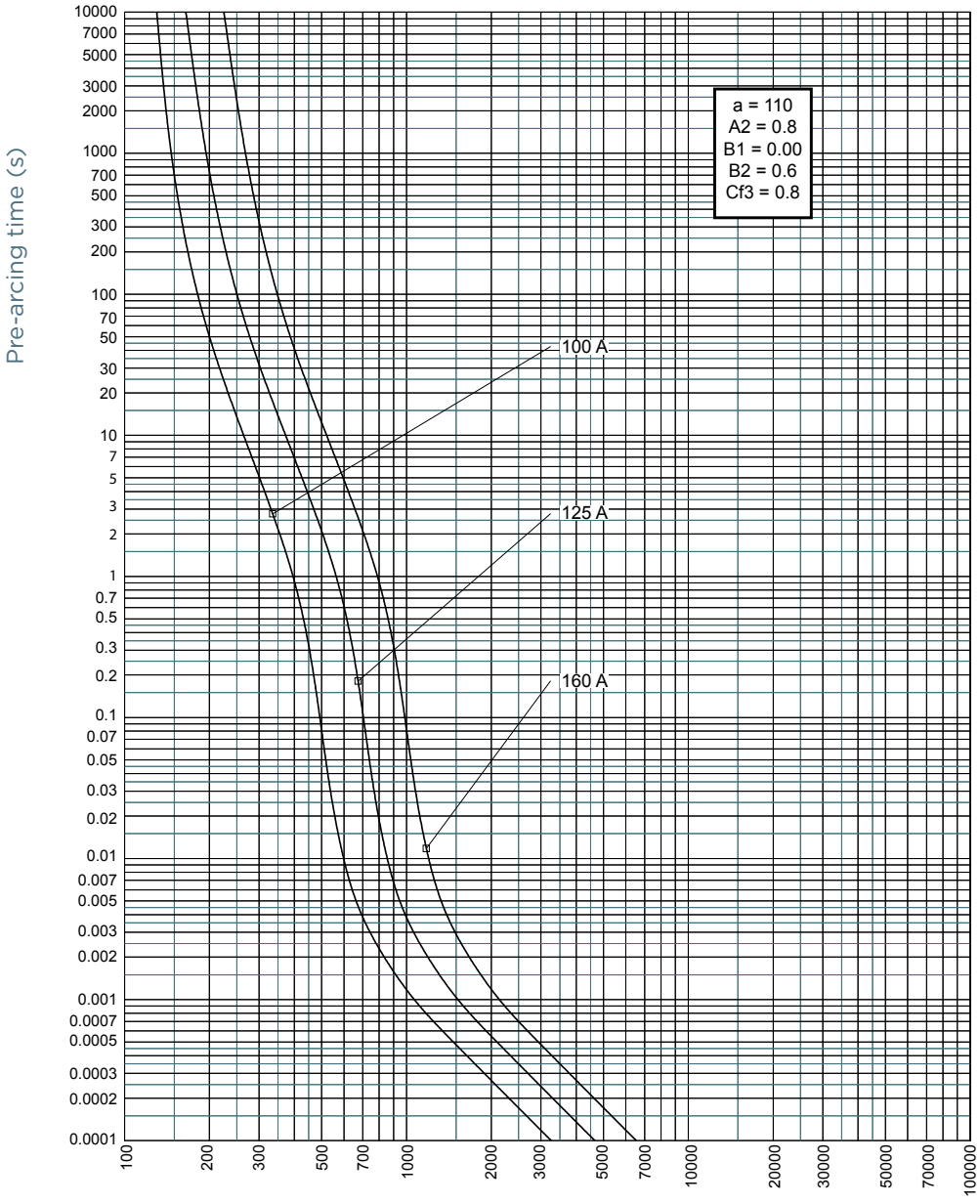

MERSEN reserves the right to change, update or correct, without notice, any information contained in this datasheet.

TIME CURRENT CHARACTERISTIC CURVES

Size 1

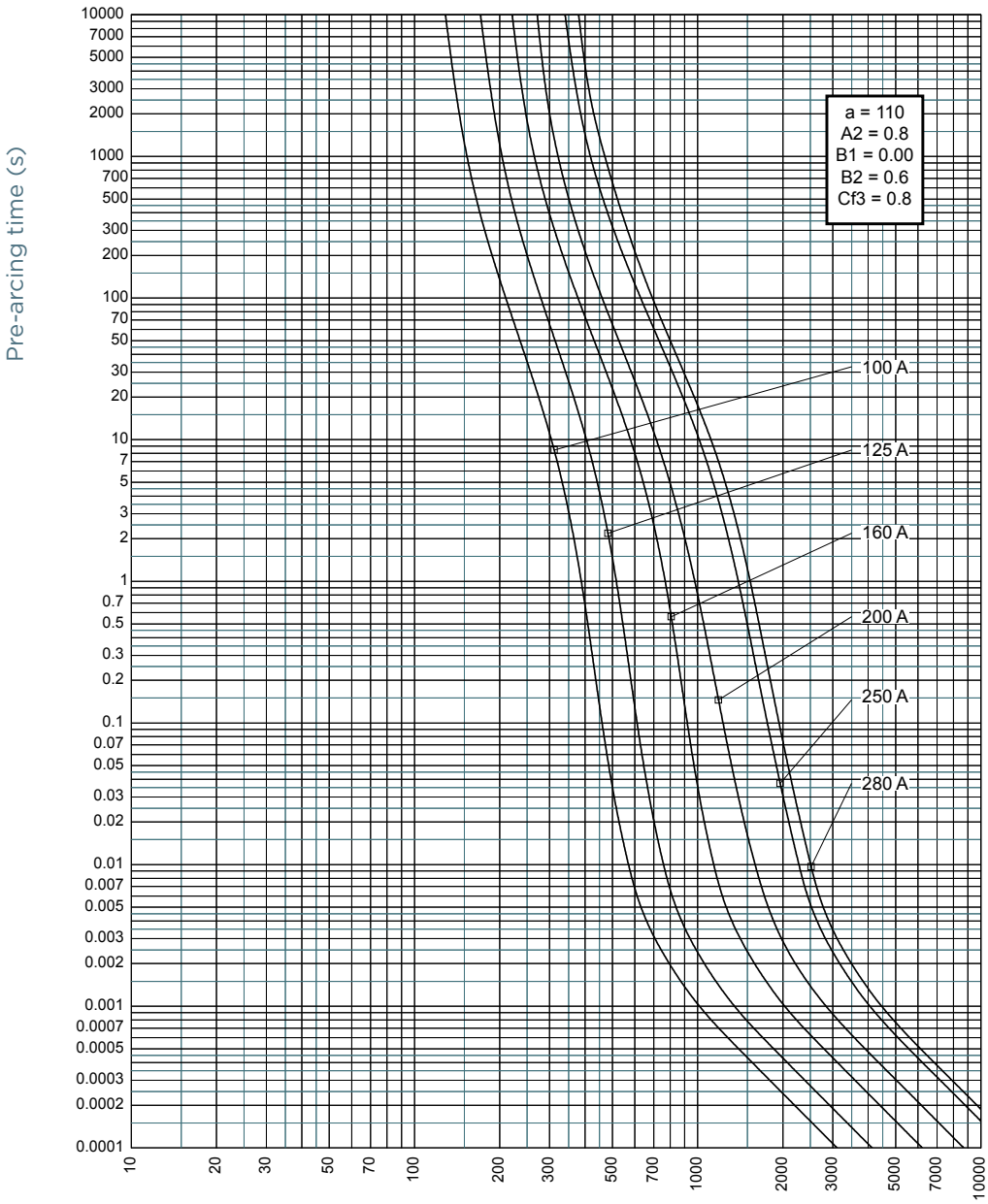

MERSEN reserves the right to change, update or correct, without notice, any information contained in this datasheet.

TIME CURRENT CHARACTERISTIC CURVES

Size 2

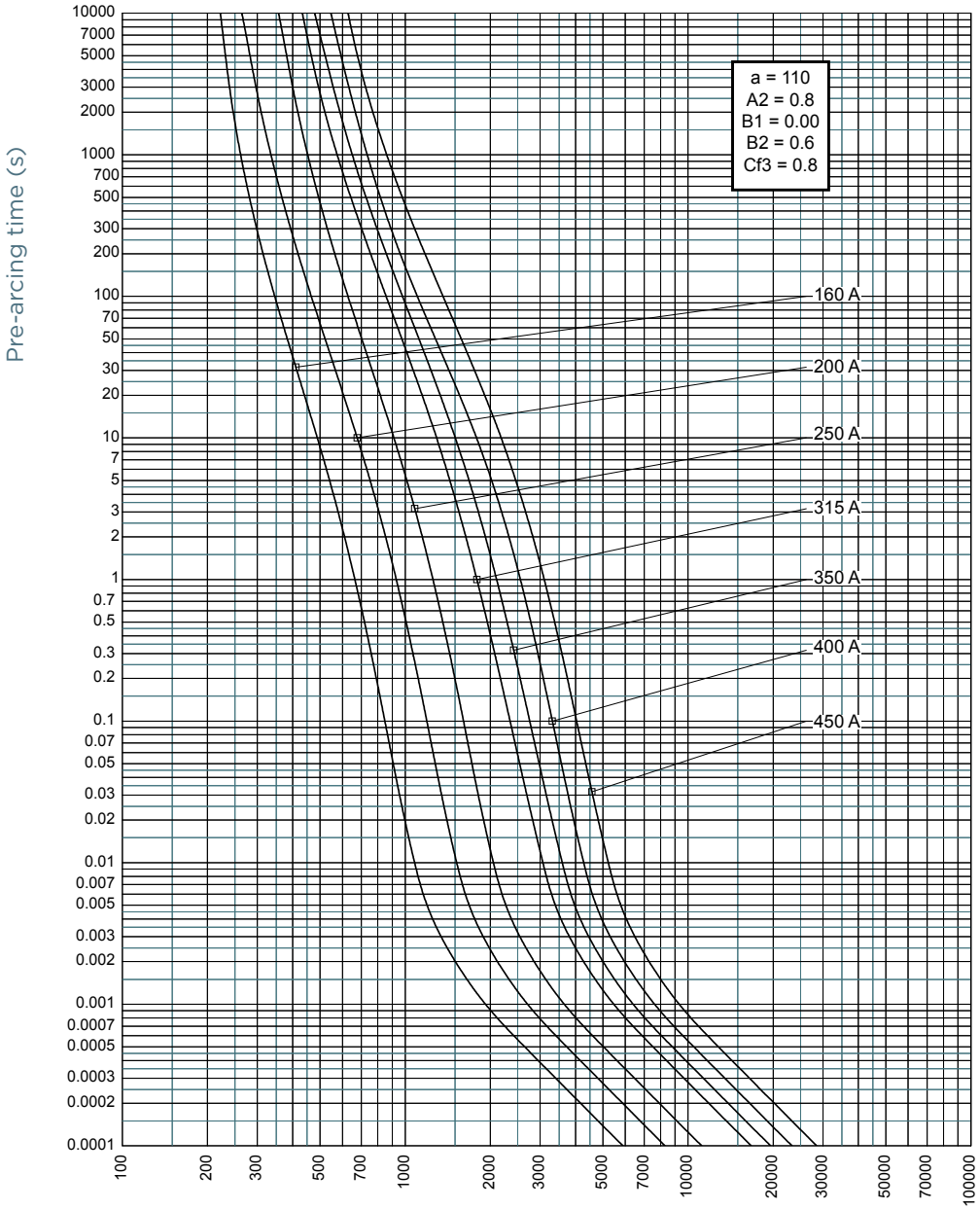

MERSEN reserves the right to change, update or correct, without notice, any information contained in this datasheet.

TIME CURRENT CHARACTERISTIC CURVES

Size 3

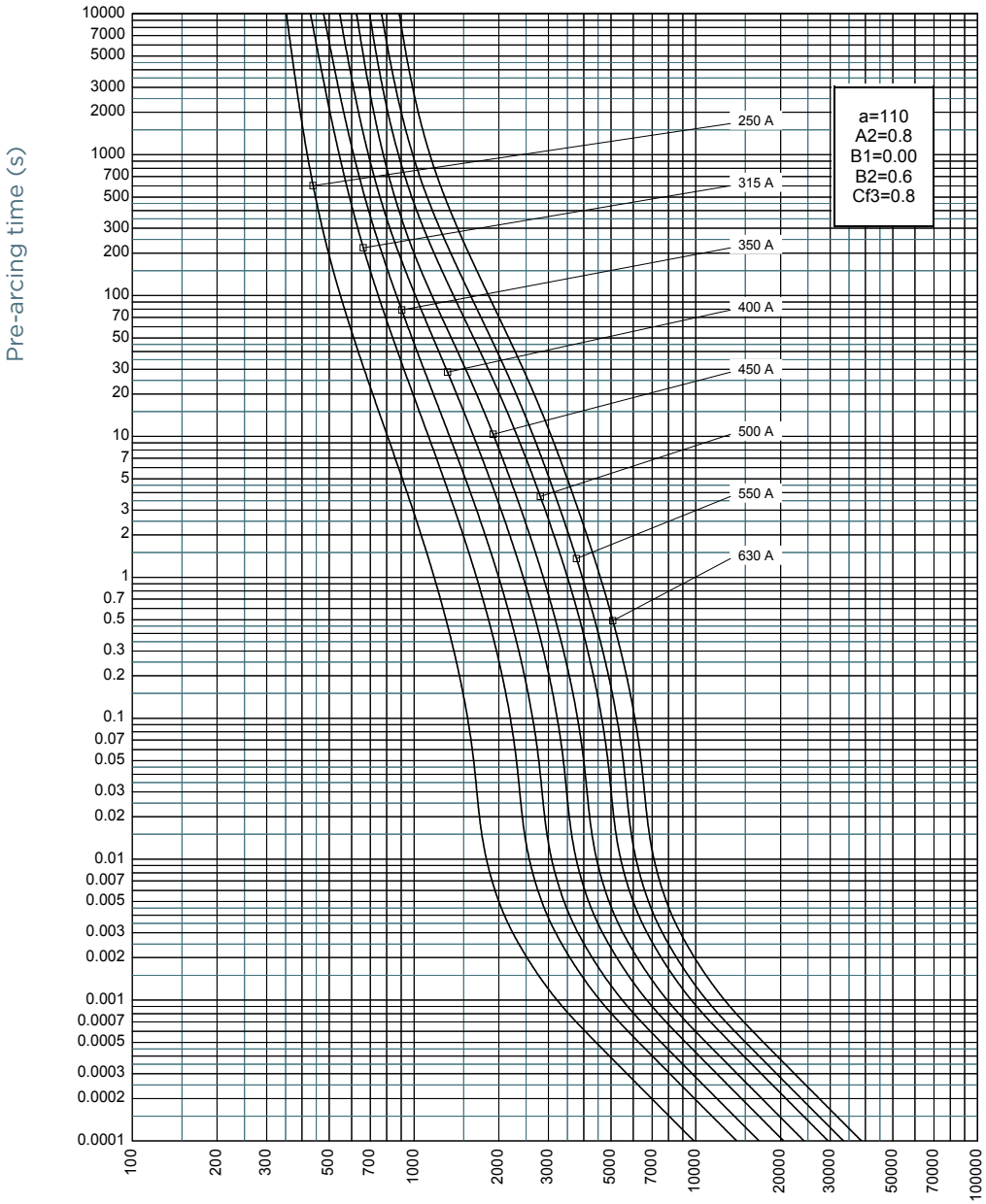

MERSEN reserves the right to change, update or correct, without notice, any information contained in this datasheet.

CUT-OFF CURRENT CHARACTERISTIC

Size 000

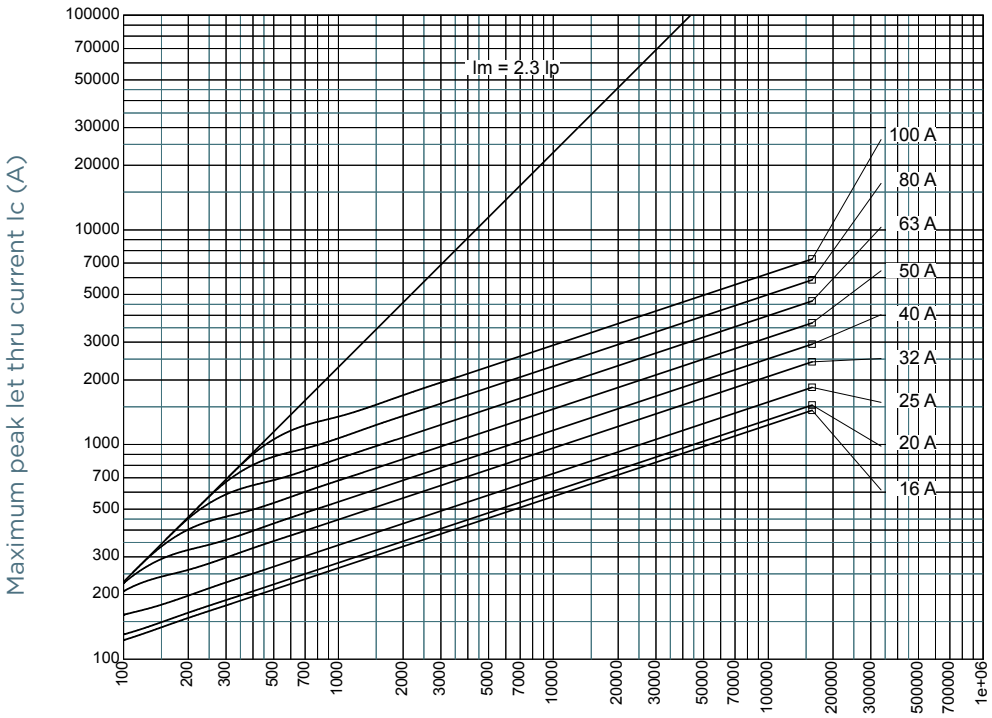

Size 00

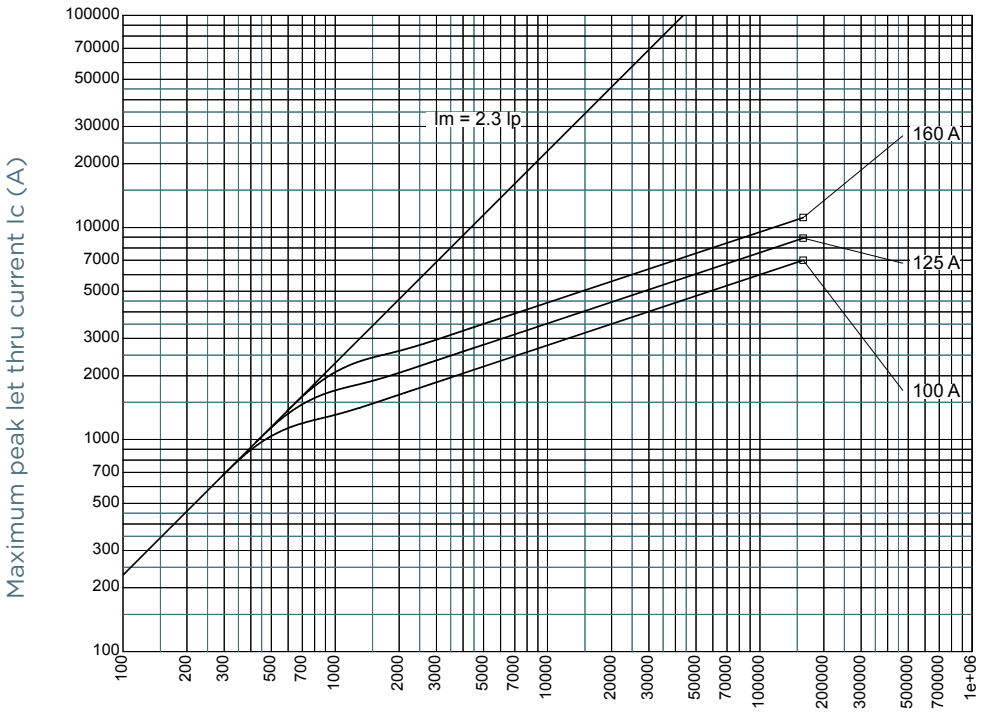

MERSEN reserves the right to change, update or correct, without notice, any information contained in this datasheet.

CUT-OFF CURRENT CHARACTERISTIC

Size 1

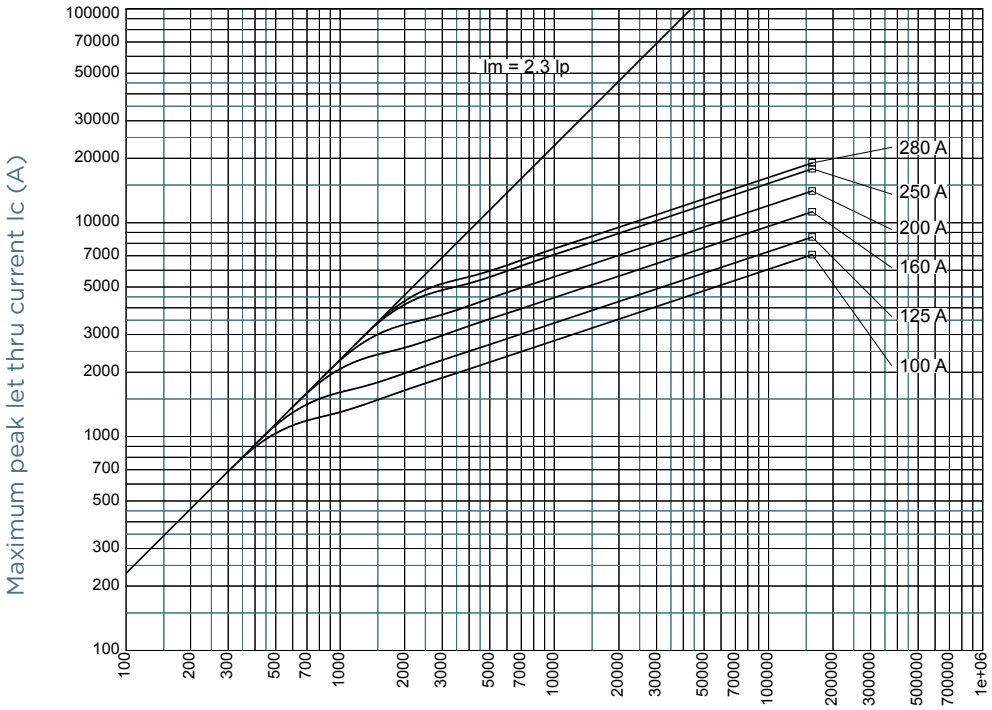

Size 2

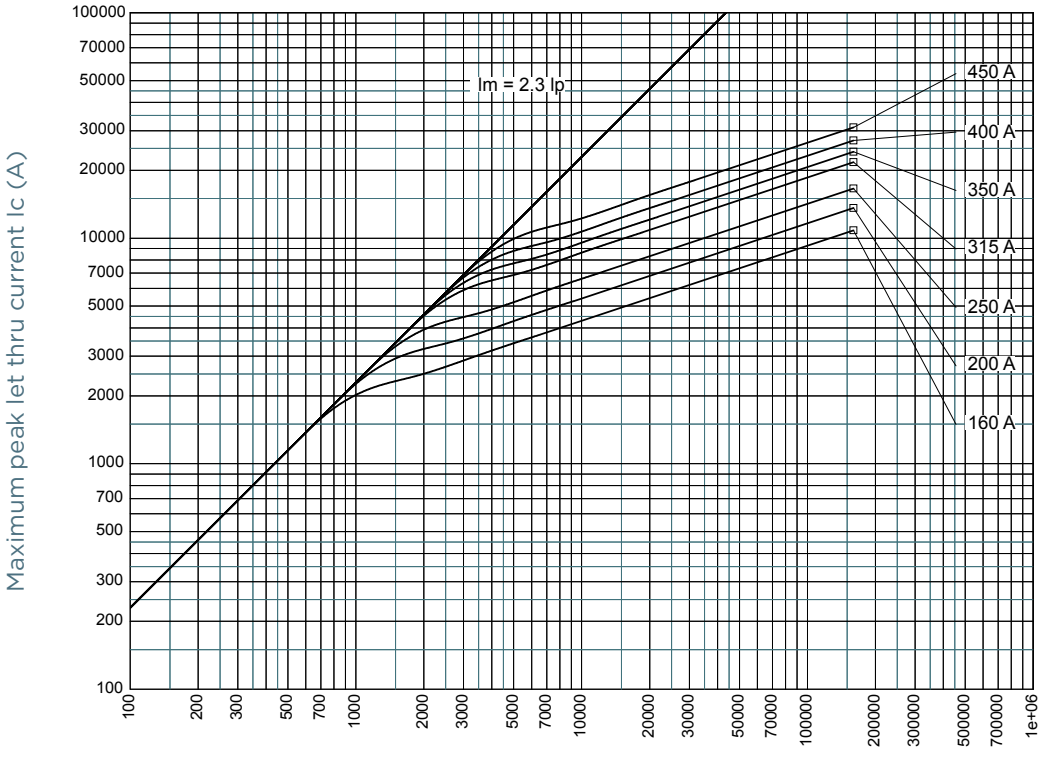

MERSEN reserves the right to change, update or correct, without notice, any information contained in this datasheet.

CUT-OFF CURRENT CHARACTERISTIC

Size 3

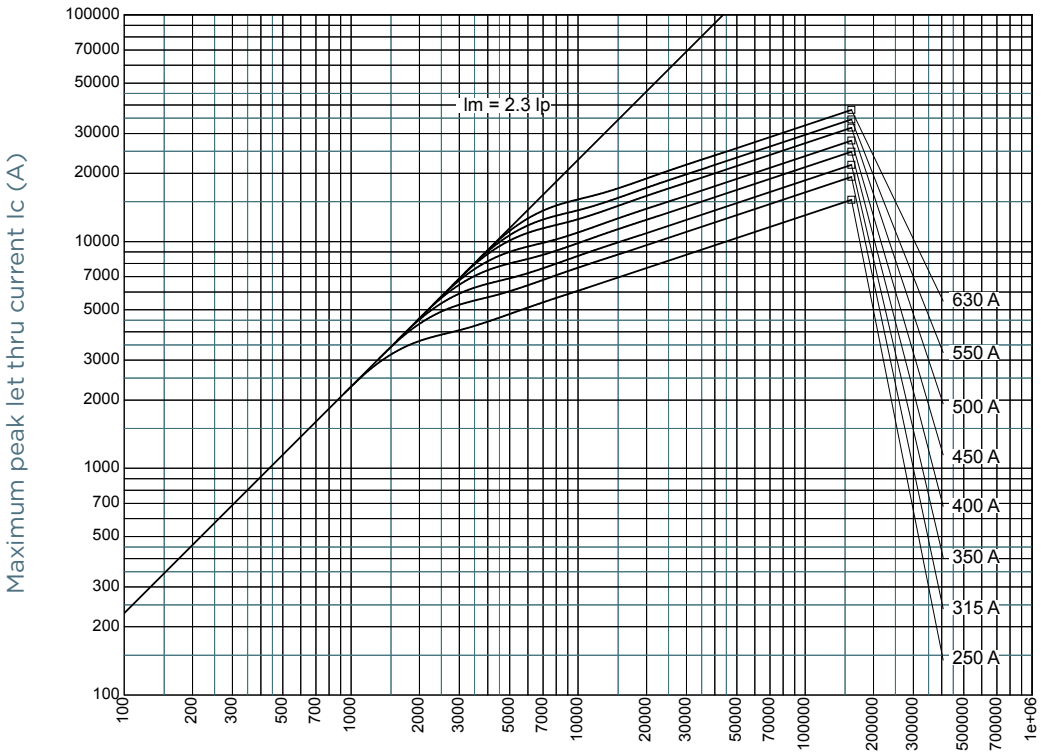

MERSEN reserves the right to change, update or correct, without notice, any information contained in this datasheet.

I^2T MULTIPLIER COEFFICIENT

Sizes 000, 00, 1, 2, 3

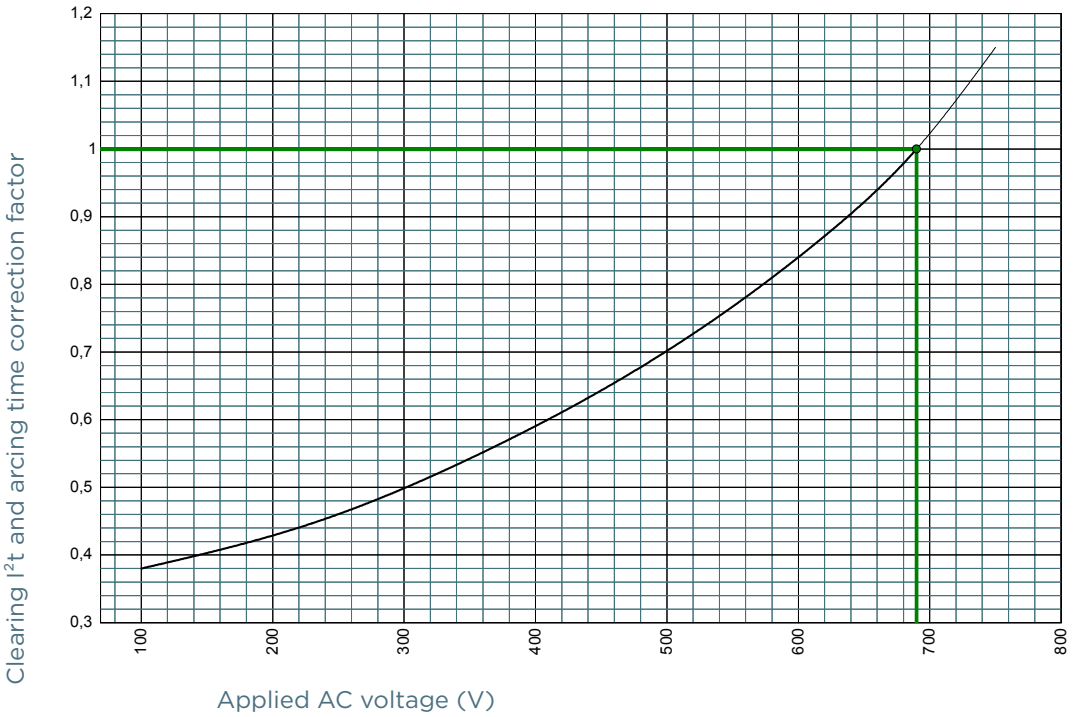

MERSEN reserves the right to change, update or correct, without notice, any information contained in this datasheet.

CHARACTERISTICS TOTAL I^2T CURVE

Size 000

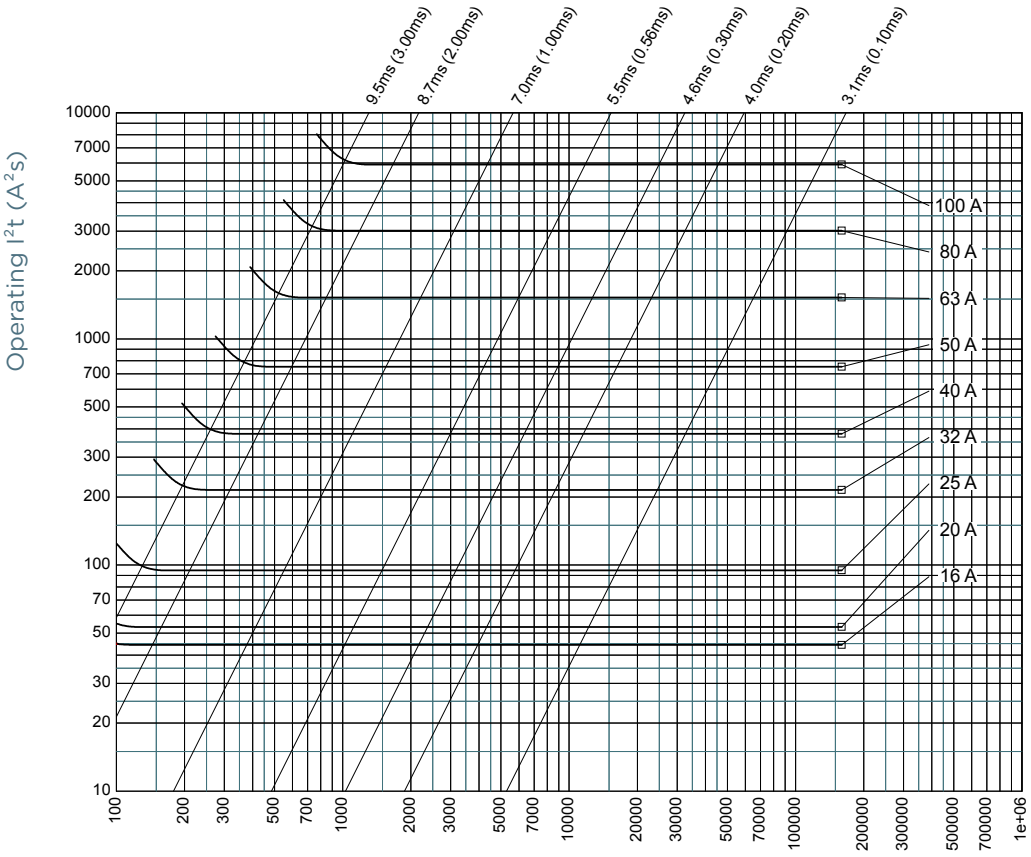

MERSEN reserves the right to change, update or correct, without notice, any information contained in this datasheet.

CHARACTERISTICS TOTAL I^2T CURVE

Size 00

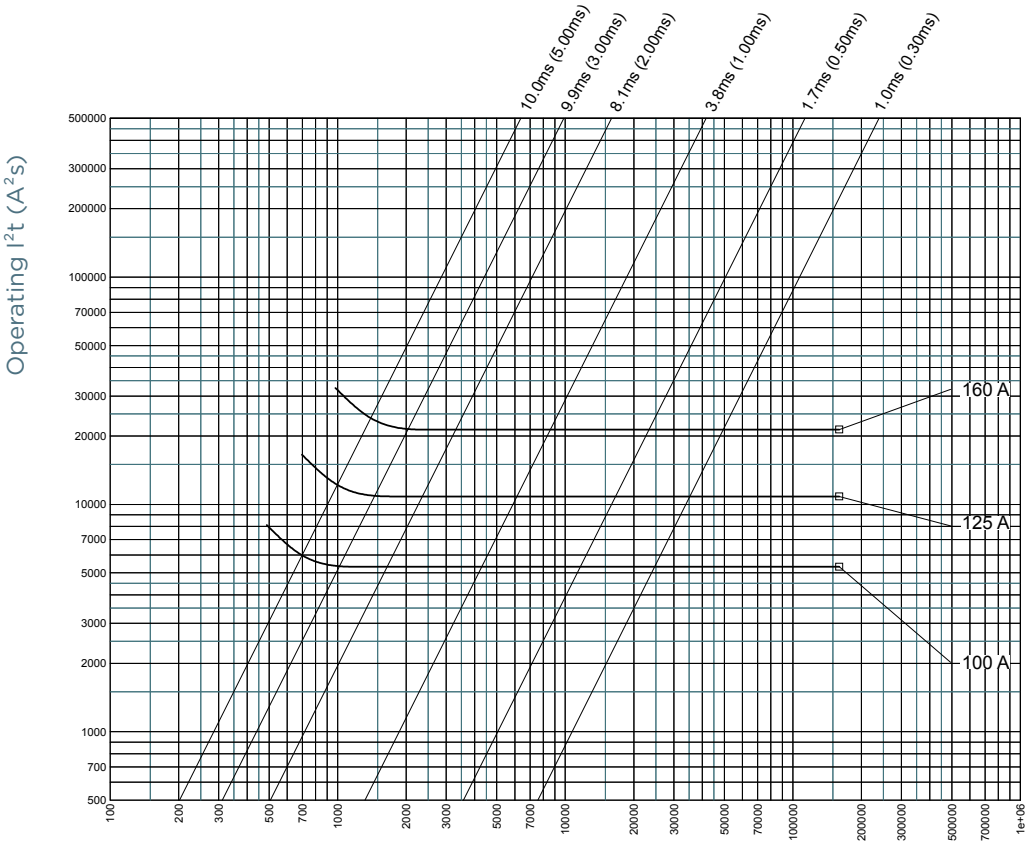

50Hz RMS symetrical prospective current (Ip)(A)

MERSEN reserves the right to change, update or correct, without notice, any information contained in this datasheet.

CHARACTERISTICS TOTAL I^2T CURVE

Size 1

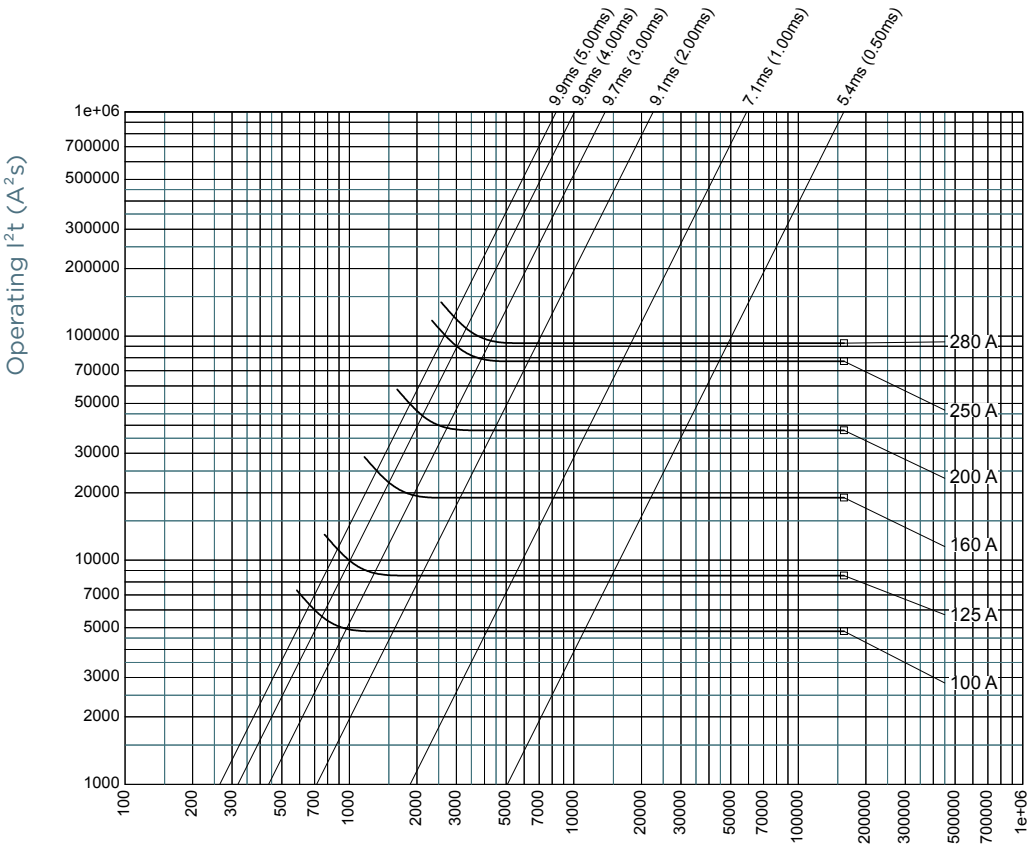

MERSEN reserves the right to change, update or correct, without notice, any information contained in this datasheet.

CHARACTERISTICS TOTAL I^2T CURVE

Size 2

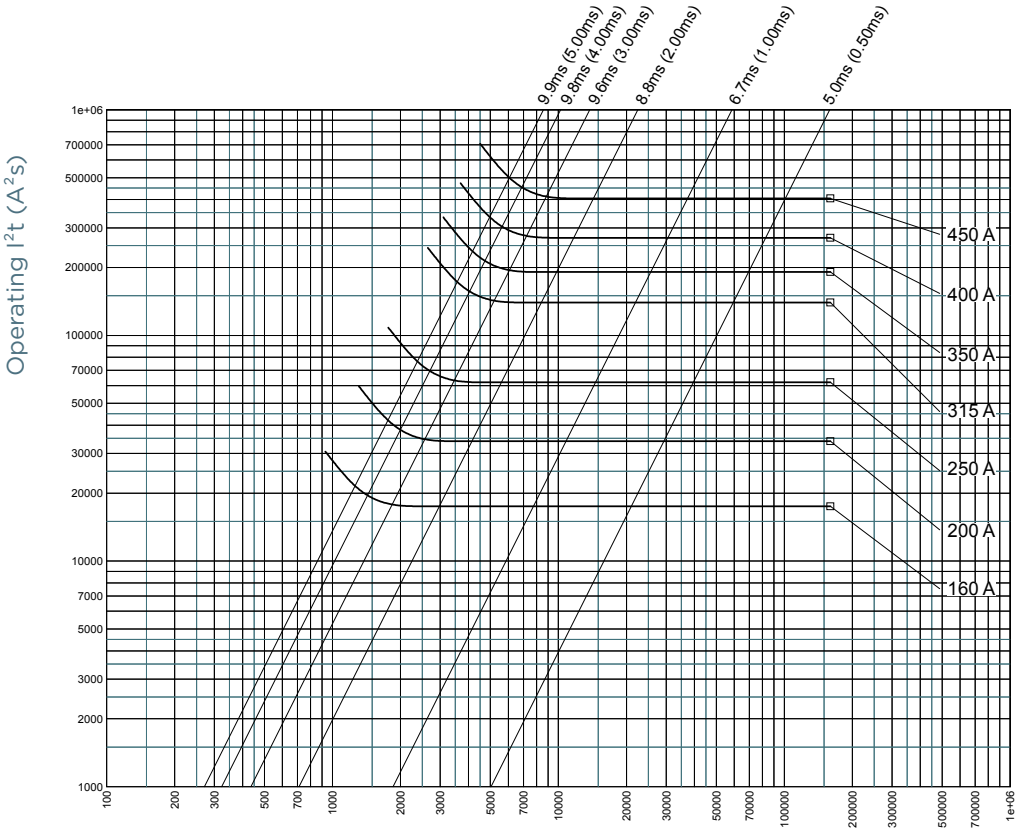

MERSEN reserves the right to change, update or correct, without notice, any information contained in this datasheet.

CHARACTERISTICS TOTAL I^2T CURVE

Size 3

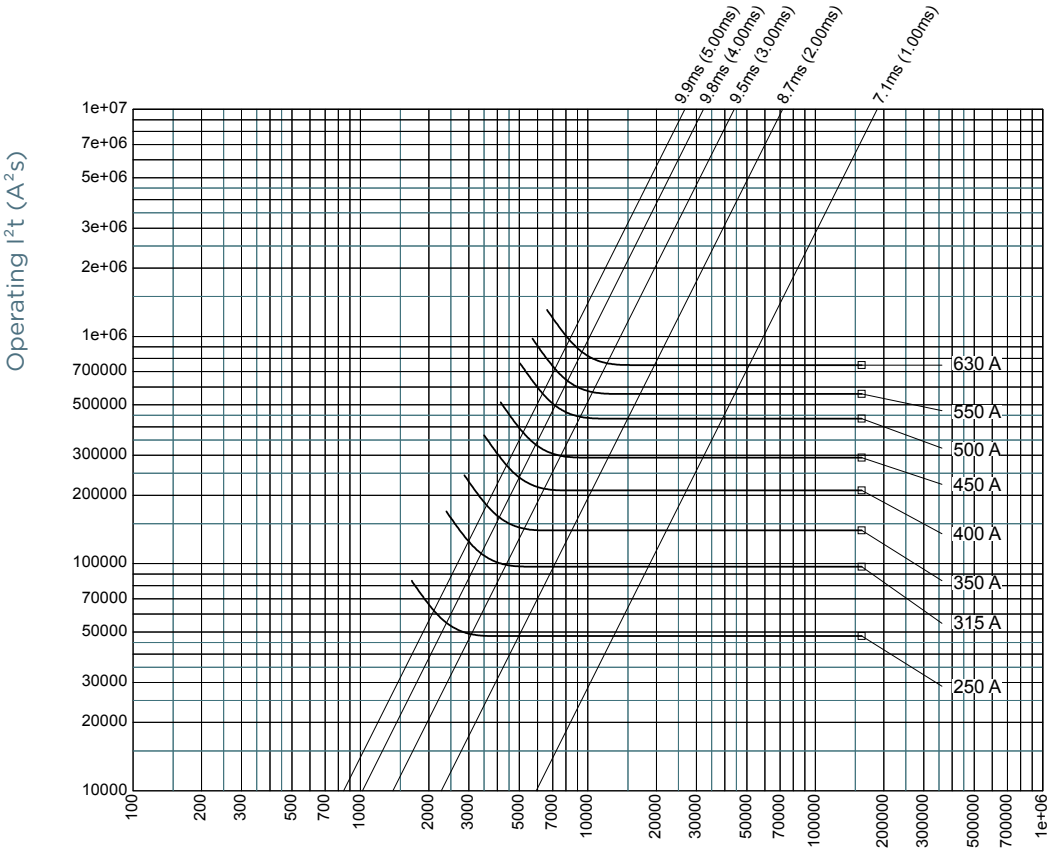

L/R TIME CONSTANT VS DC VOLTAGE CAPABILITY

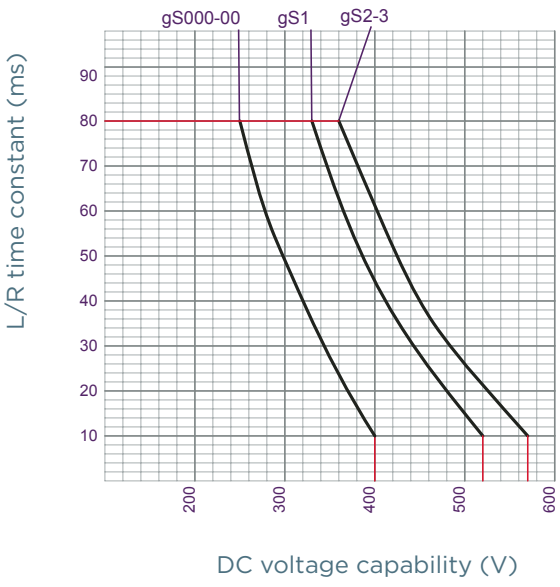

MERSEN reserves the right to change, update or correct, without notice, any information contained in this datasheet.

POWER DISSIPATION

Sizes 000, 00, 1, 2, 3

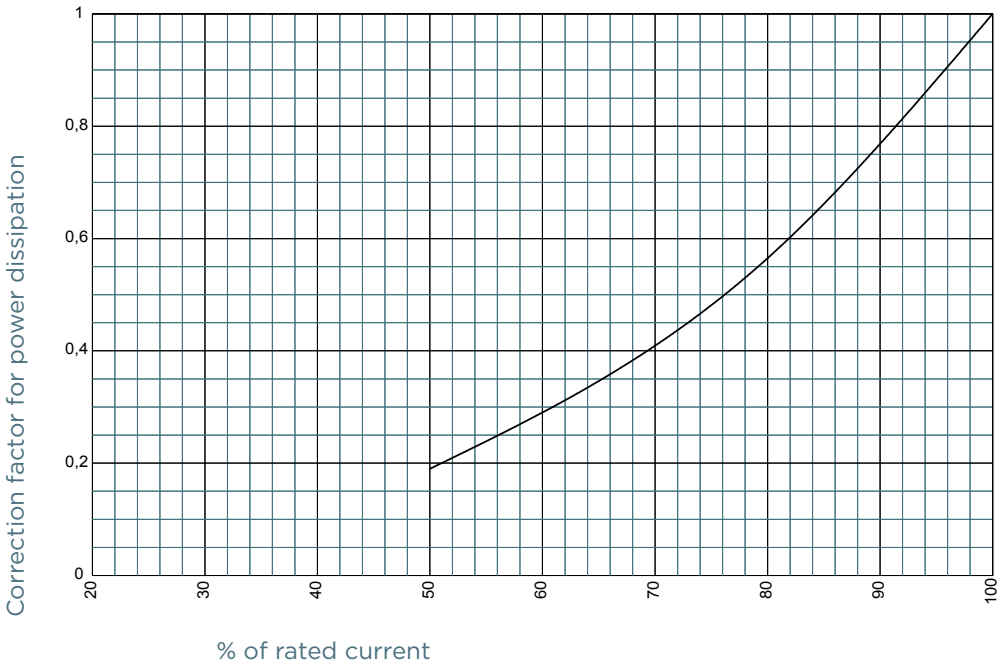

PEAK ARC VOLTAGE

Sizes 000, 00, 1, 2, 3 VAC

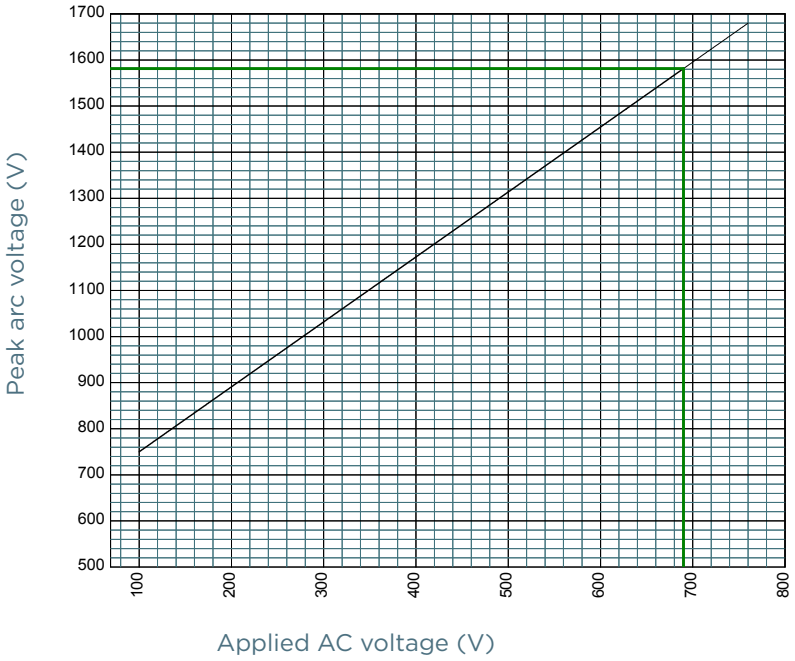

MERSEN reserves the right to change, update or correct, without notice, any information contained in this datasheet.

PEAK ARC VOLTAGE

Sizes 000, 00, 1, 2, 3 VDC

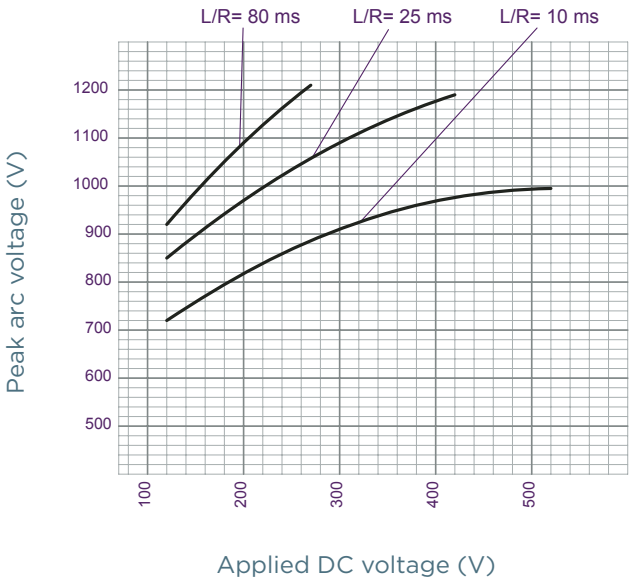

MERSEN reserves the right to change, update or correct, without notice, any information contained in this datasheet.

DIMENSIONS

Size 000

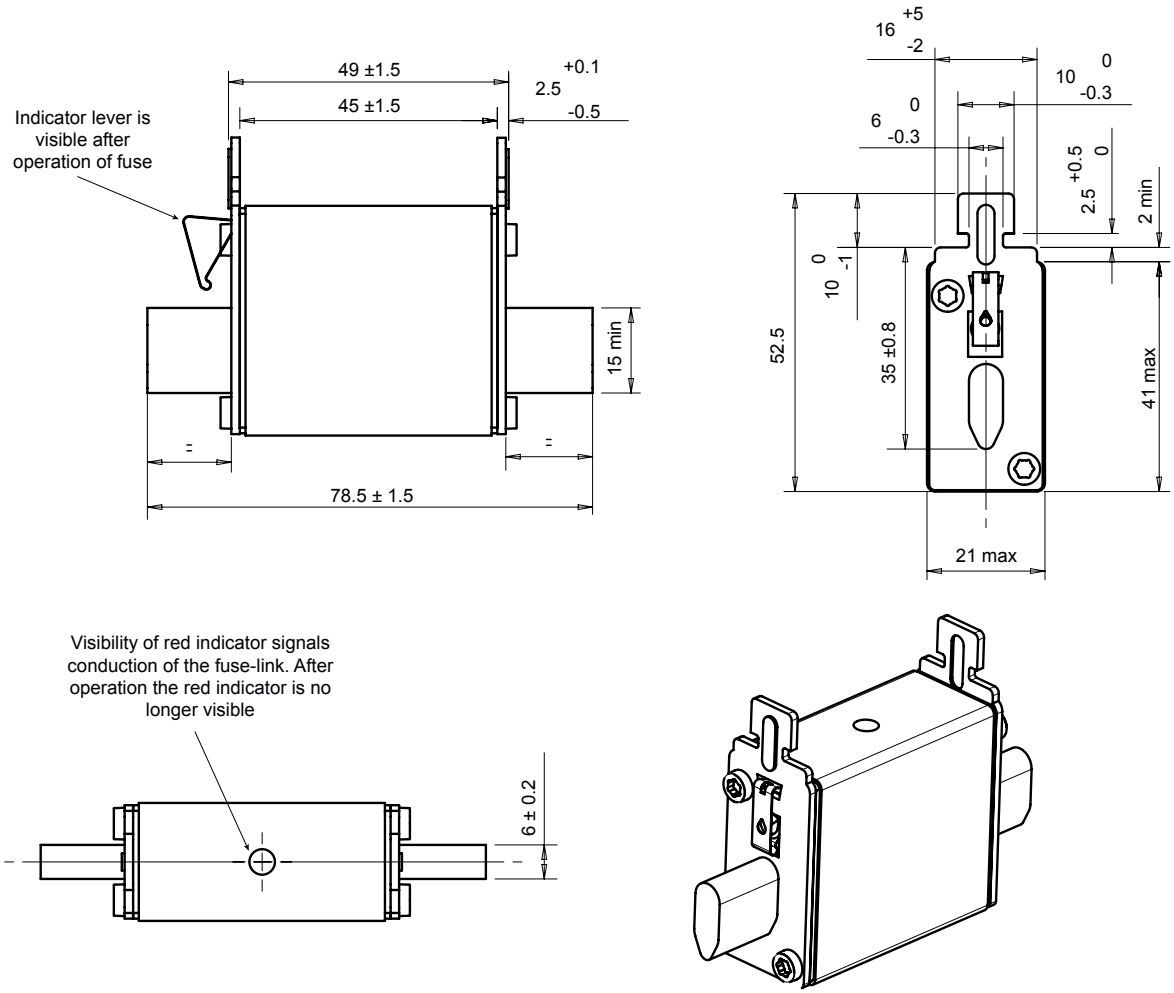

Dimensions in mm

MERSEN reserves the right to change, update or correct, without notice, any information contained in this datasheet.

DIMENSIONS

Size 00

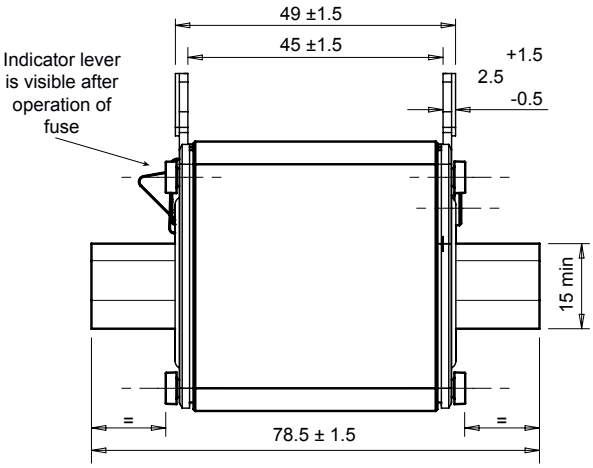

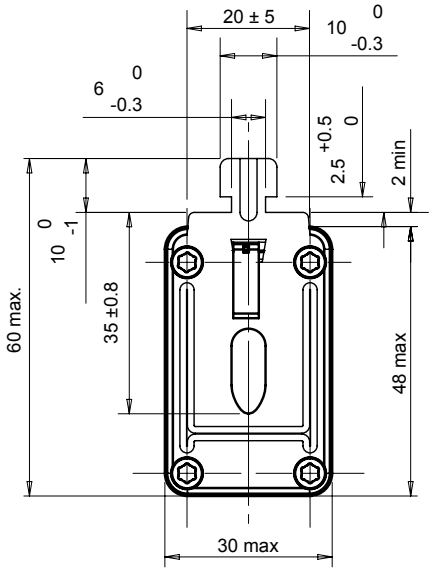

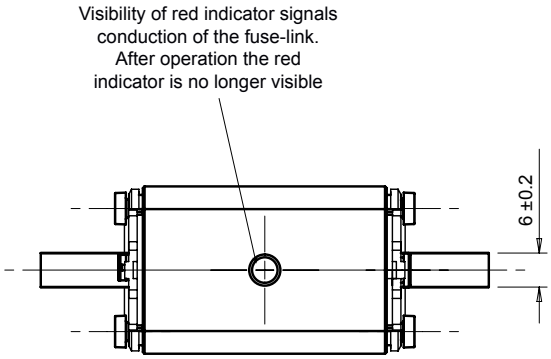

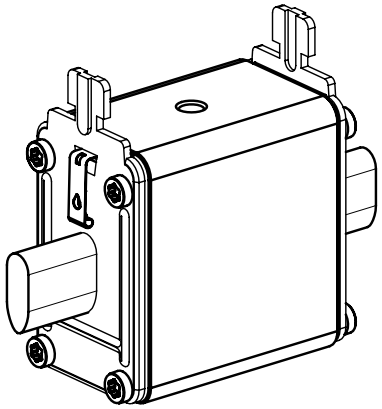

Dimensions in mm

MERSEN reserves the right to change, update or correct, without notice, any information contained in this datasheet.

DIMENSIONS

Size 1

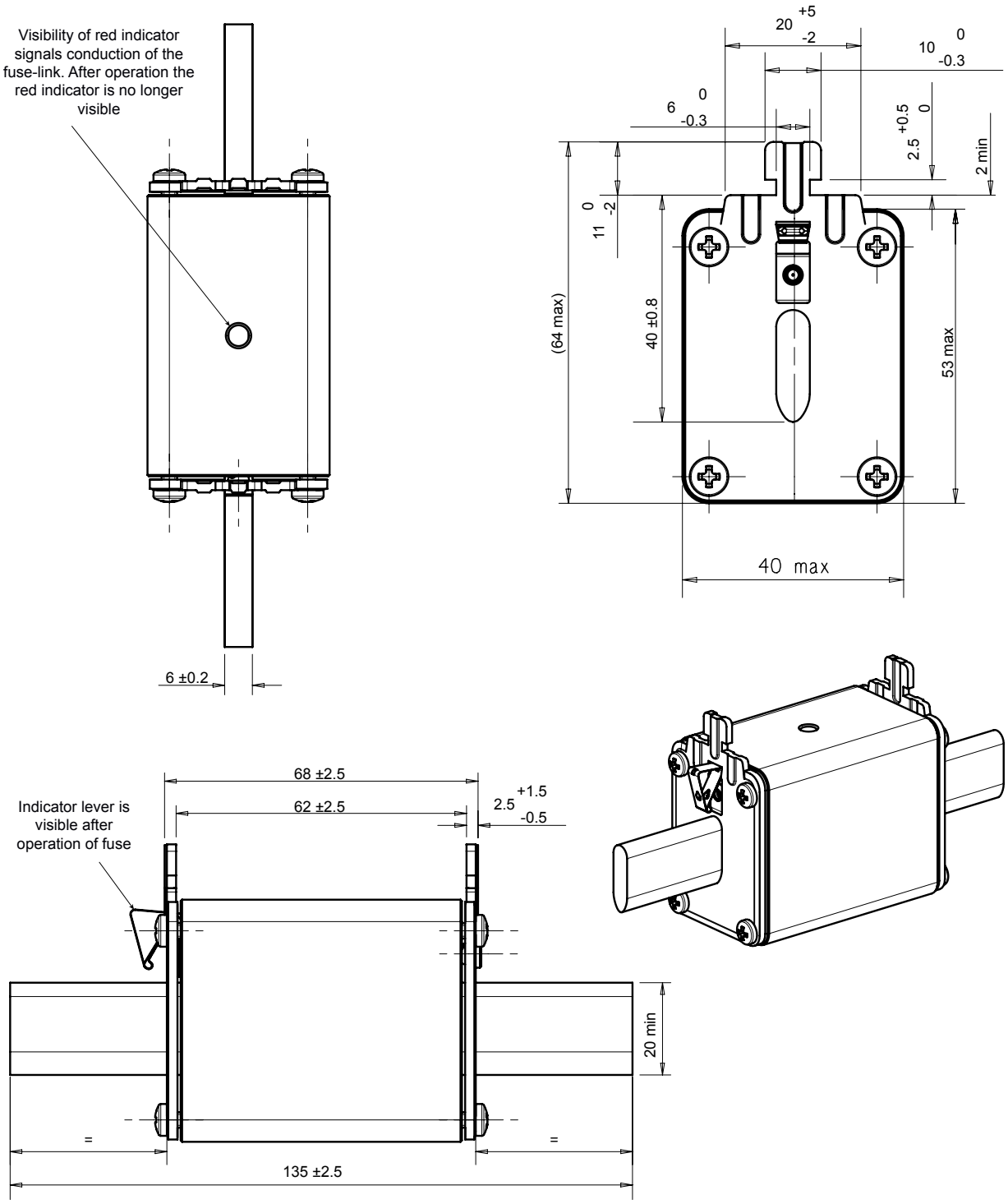

Dimensions in mm

MERSEN reserves the right to change, update or correct, without notice, any information contained in this datasheet.

DIMENSIONS

Size 2

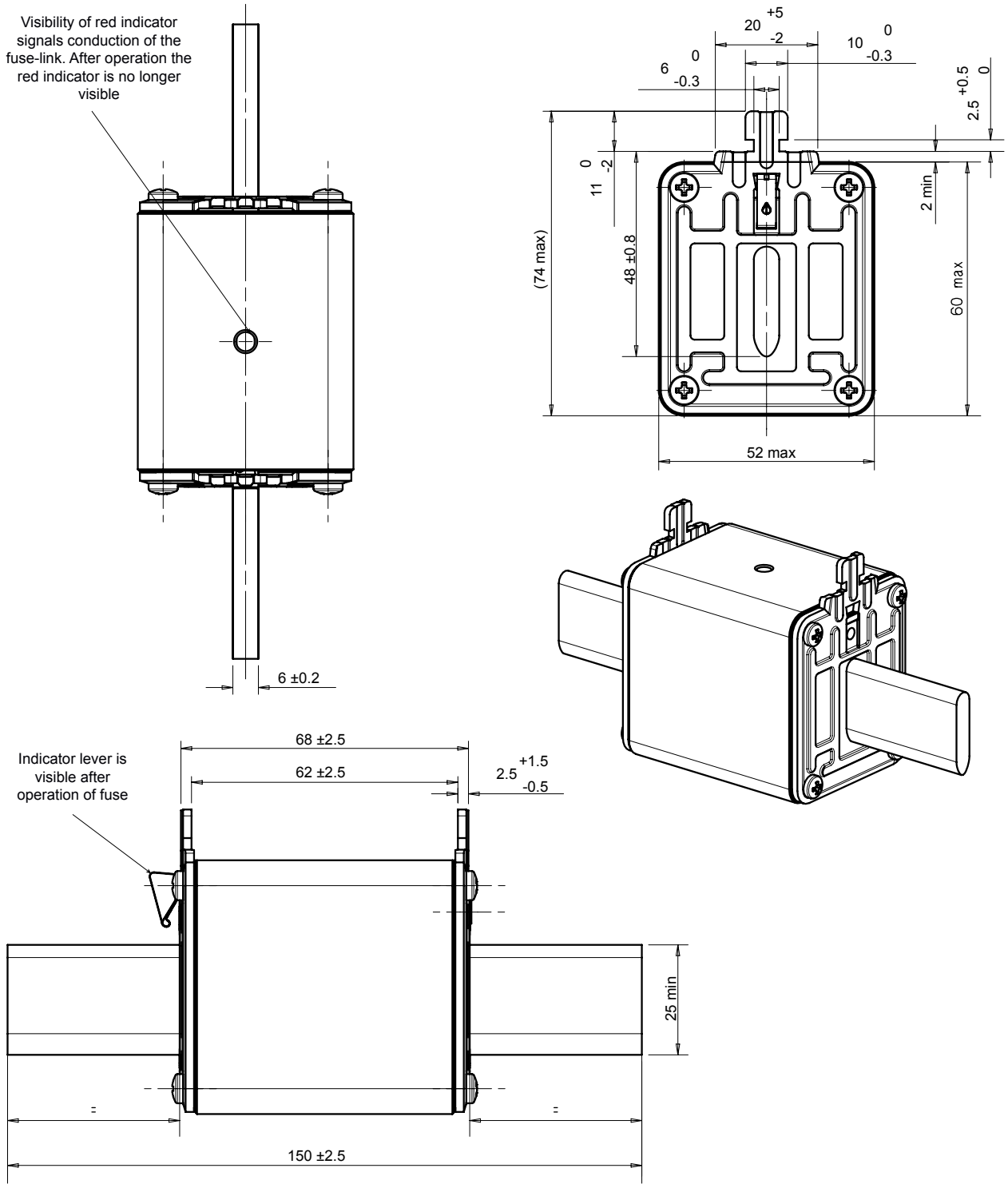

Dimensions in mm

MERSEN reserves the right to change, update or correct, without notice, any information contained in this datasheet.

DIMENSIONS

Size 3

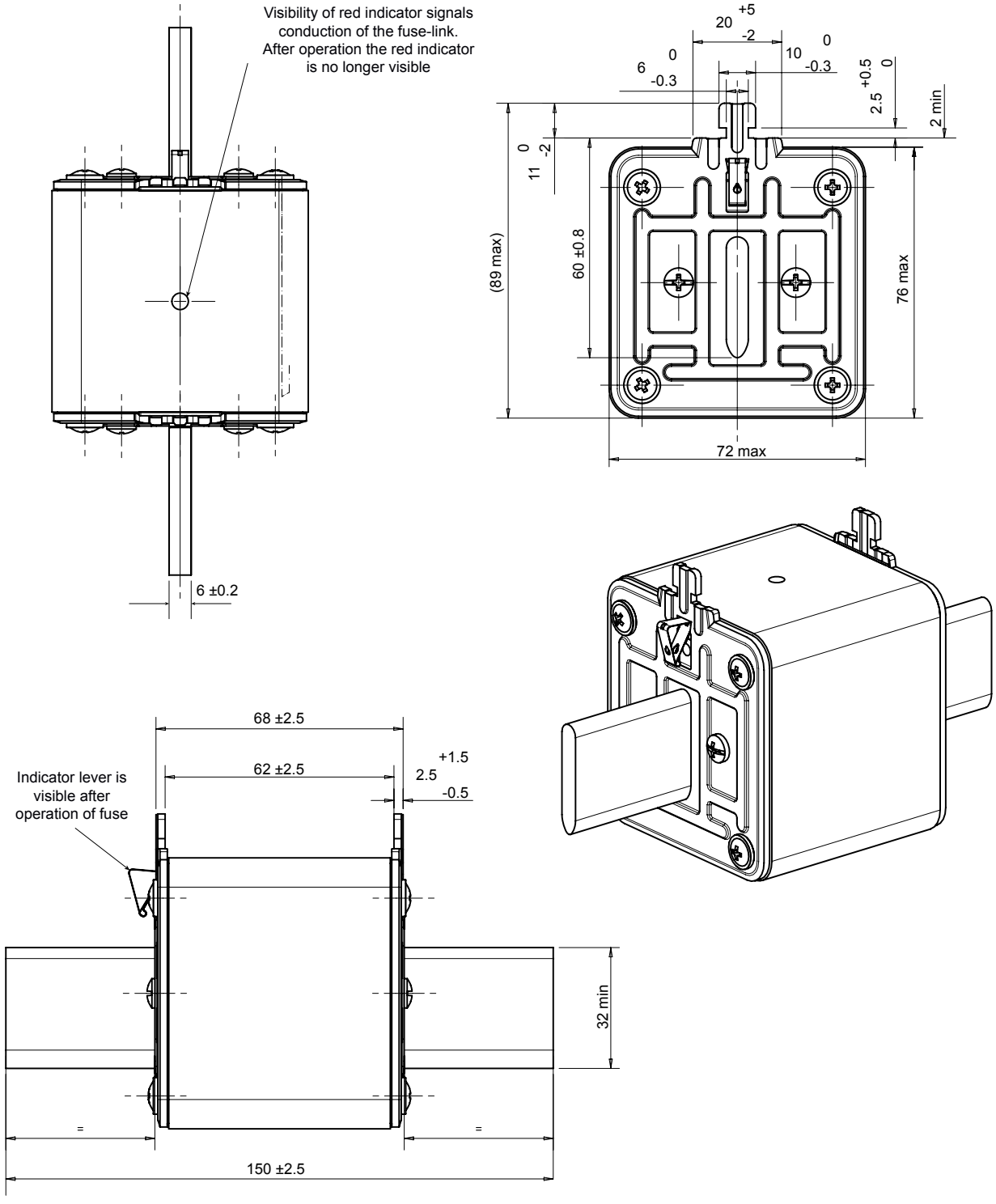

Dimensions in mm

MERSEN reserves the right to change, update or correct, without notice, any information contained in this datasheet.