

Retroreflective sensor

ML100-55/103/115a

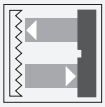

- Miniature design
- Easy to use
- Clearly visible LEDs for Power ON, switching state and weak signal indication
- Full metal thread mounting
- Very bright, highly visible light spot
- Not sensitive to ambient light

Retroreflective sensor with polarization filter, plastic housing, 5 m detection range, red light, sensitivity adjuster, light/dark on, DC version, PNP output, fixed cable with M8 plug

Function

The ML100 series is characterized by its miniature housing with integral, all-metal threaded bushings. All versions are equipped with a visible red transmitter LED. This greatly simplifies installation and commissioning. The switching states are easily visible from all directions thanks to the highly visible LEDs.

Dimensions

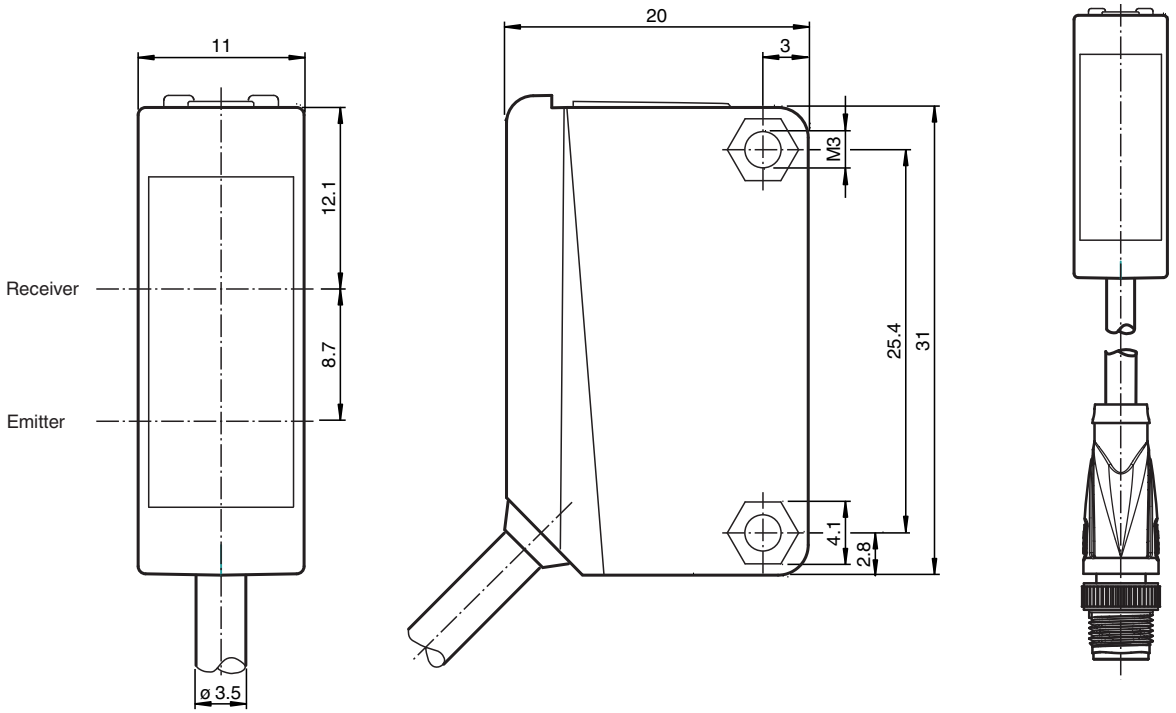

Release date: 2020-05-26 Date of issue: 2020-05-26 Filename: 221826_eng.pdf

Technical Data

General specifications		
Effective detection range		0 ... 5 m
Reflector distance		0.01 ... 5 m
Threshold detection range		7 m
Reference target		H50 reflector
Light source		LED
Light type		modulated visible red light
Polarization filter		yes
Diameter of the light spot		approx. 500 mm at a distance of 7 m
Angle of divergence		approx. 4 °
Optical face		frontal
Ambient light limit		EN 60947-5-2:2007+A1:2012
Functional safety related parameters		
$MTTF_d$		860 a
Mission Time (T_M)		20 a
Diagnostic Coverage (DC)		0 %
Indicators/operating means		
Operation indicator		LED green: power on
Function indicator		LED yellow: lights up when receiving the light beam ; flashes when falling short of the stability control; OFF when light beam is interrupted
Control elements		sensitivity adjustment
Control elements		Light-on/dark-on changeover switch
Electrical specifications		
Operating voltage	U_B	10 ... 30 V DC
Ripple		max. 10 %
No-load supply current	I_0	< 20 mA
Output		
Switching type		The switching type of the sensor is adjustable. The default setting is: light on
Signal output		1 PNP output, short-circuit protected, reverse polarity protected, open collector
Switching voltage		max. 30 V DC
Switching current		max. 100 mA , resistive load
Voltage drop	U_d	≤ 1.5 V DC
Switching frequency	f	1000 Hz
Response time		0.5 ms
Conformity		
Product standard		EN 60947-5-2
Approvals and certificates		
UL approval		cULus Listed, Class 2 Power Source or listed Power Supply with a limited voltage output with (maybe integrated) fuse (max. 3.3 A according UL248), Type 1 enclosure
CCC approval		CCC approval / marking not required for products rated ≤36 V
Ambient conditions		
Ambient temperature		-30 ... 60 °C (-22 ... 140 °F)
Storage temperature		-40 ... 70 °C (-40 ... 158 °F)
Mechanical specifications		
Housing width		11 mm
Housing height		31 mm
Housing depth		20 mm
Degree of protection		IP67
Connection		300 mm fixed cable with M8 connector, 4-pin
Material		
Housing		PC (Polycarbonate)
Optical face		PMMA
Mass		approx. 20 g
Tightening torque, fastening screws		0.6 Nm

Release date: 2020-05-26 Date of issue: 2020-05-26 Filename: 221826_eng.pdf

Technical Data

Cable length		0.3 m

Connection Assignment

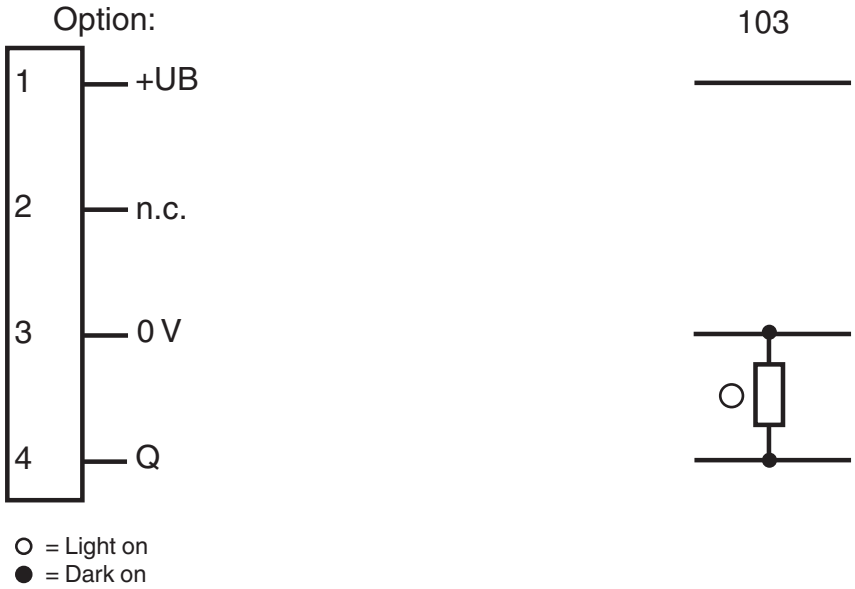

Connection Assignment



Wire colors in accordance with EN 60947-5-2

1	BN	(brown)
2	WH	(white)
3	BU	(blue)
4	BK	(black)

Assembly

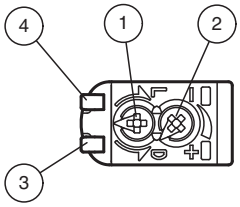

1	Light-Dark-switching	
2	Sensitivity adjuster	
3	Signal display	yellow
4	Operating display	green

Release date: 2020-05-26 Date of issue: 2020-05-26 Filename: 221826_eng.pdf

Characteristic Curve

Characteristic response curve

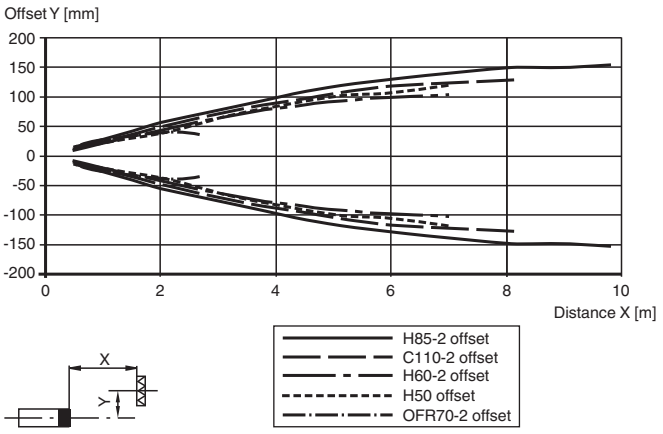

Relative received light strength (typical)

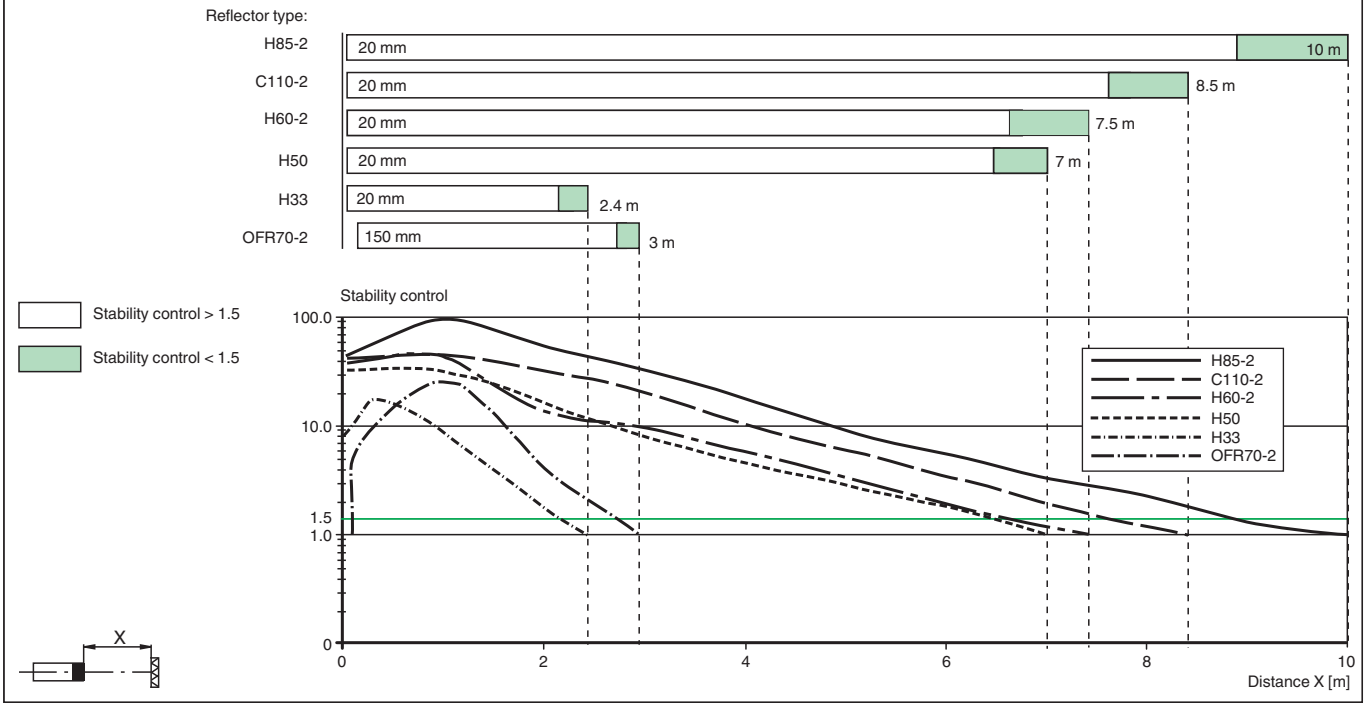

Accessories

	**OMH-ML100-09**	Mounting aid for round steel ø 12 mm or sheet 1.5 mm ... 3 mm
	**OMH-F10-ML100**	Mounting aid for ML100 series
	**OMH-ML100-01**	Mounting aid for ML100 series, mounting bracket
	**OMH-ML100-02**	Mounting aid for ML100 series, mounting bracket
	**OMH-ML100-03**	Mounting aid for round steel ø 12 mm or sheet 1.5 mm ... 3 mm

Release date: 2020-05-26 Date of issue: 2020-05-26 Filename: 221826_eng.pdf

Accessories

	**OMH-ML100-04**	Mounting aid for ML100 series, mounting bracket
	**OMH-ML100-05**	Mounting aid for ML100 series, mounting bracket
	**OMH-10**	Mounting aid
	**REF-H85-2**	Reflector, rectangular 84.5 mm x 84.5 mm, mounting holes
	**REF-C110-2**	Reflector, round ø 84 mm, central mounting hole
	**REF-H60-2**	Reflector with mounting holes
	**REF-H50**	Reflector, rectangular 51 mm x 61 mm, mounting holes, fixing strap
	**REF-H33**	Reflector with screw fixing
	**OFR-70-2**	Reflective tape 70 mm x 70 mm
	**OMH-ML100-08**	Mounting aid for ML100 series, Snap-in

Release date: 2020-05-26 Date of issue: 2020-05-26 Filename: 221826_eng.pdf

Accessories

Other suitable accessories can be found at www.pepperl-fuchs.com

Release date: 2020-05-26 Date of issue: 2020-05-26 Filename: 221826_eng.pdf