OGP103

Retro-reflective sensor

OGP-HNKG/US

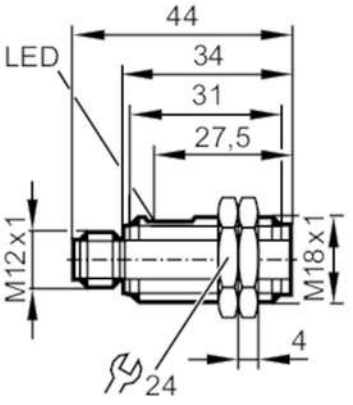

Product characteristics		
Type of light		red light
Housing		threaded type
Application		
Special feature		polarisation filter
Function principle		Retro-reflective sensor
Electrical data		
Operating voltage	[V]	10...30 DC
Current consumption	[mA]	20
Protection class		III
Reverse polarity protection		yes
Type of light		red light
Outputs		
Electrical design		NPN
Output function		light-on mode
Max. voltage drop switching output DC	[V]	2.5
Permanent current rating of switching output DC	[mA]	200
Switching frequency DC	[Hz]	1000
Short-circuit protection		yes
Overload protection		yes
Detection zone		
Range referred to prismatic reflector	[m]	0.05...2.5; (Prismatic reflector Ø 80 E20005)
Range adjustable		no
Max. light spot diameter	[mm]	200
Light spot dimensions refer to		at maximum range
Polarisation filter available		yes

OGP103

Retro-reflective sensor

OGP-HNKG/US

Operating conditions			
Ambient temperature	[°C]	-25...60	
Protection		IP 67; (in conjunction with a corresponding connector)	
Tests / approvals			
EMC		EN 60947-5-2	
MTTF	[years]	1161	
Mechanical data			
Weight	[g]	14.8	
Housing		threaded type	
Dimensions	[mm]	M18 x 1 / L = 44	
Thread designation		M18 x 1	
Materials		housing: ABS	
Lens material		PMMA	
Displays / operating elements			
Display		switching status	1 x LED, yellow
Accessories			
Items supplied		lock nuts: 2	
Remarks			
Pack quantity		1 pcs.	
Electrical connection			

Connector: 1 x M12; coding: A



Connection

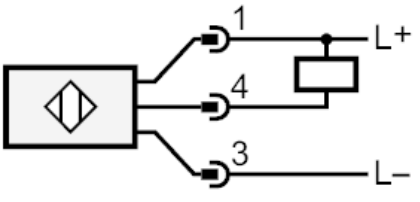

OGP103

Retro-reflective sensor

OGP-HNKG/US

Diagrams and graphs

excess gain graph

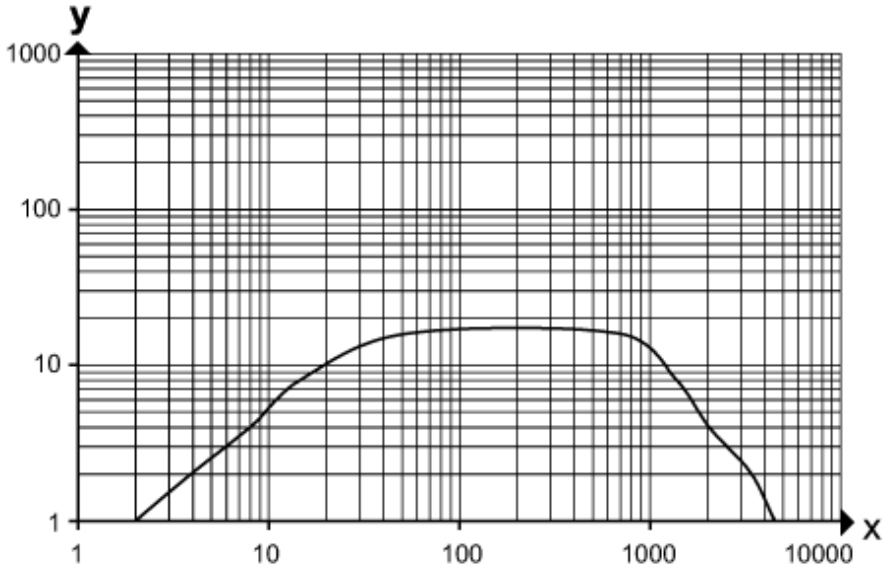

x: distance [mm]

y: excess gain factor