22ECS45 Ultra EC™

Ø 22 mm • 2-pole • 120 W

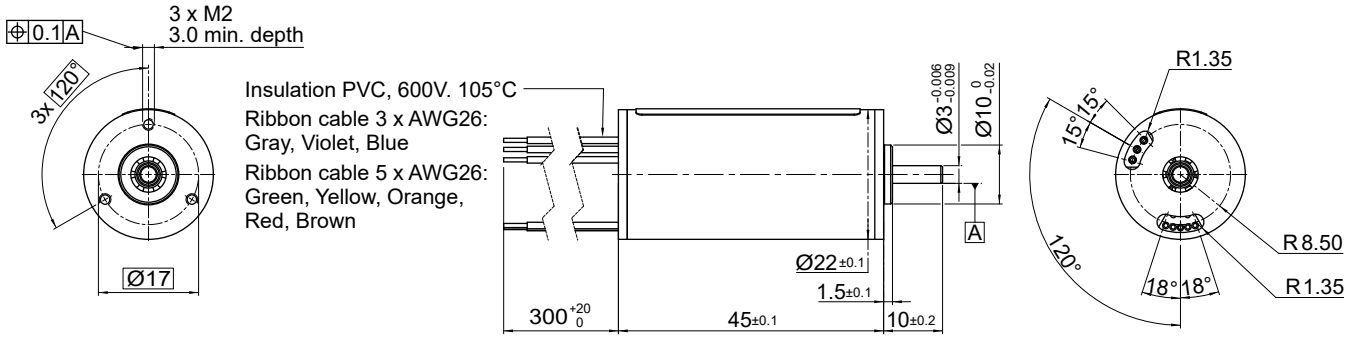

Dimensions in mm.

Electrical Data		Symbol	22ECS45-10B-xxx.01				Unit
			38	30	24	18	
1	Nominal Voltage	U_N	24	24	24	24	Volt
2	Optimization Direction	-	CCW	CCW	CCW	CCW	-
3	No-Load Speed	n_0	34,500	43,500	51,600	68,500	rpm
4	Typical No-Load Current	I_0	160	195	240	300	mA
5	Max Continuous Mechanical Power (@25°C)	P_{max}	120	120	120	120	W
6	Max Continuous Current	$I_{e\,max}$	4.0	5.2	6.4	8.2	A
7	Max Continuous Torque	$M_{e\,max}$	26.6 (3.77)	26.8 (3.8)	26.7 (3.79)	26.8 (3.8)	mNm (oz-in)
8	Back EMF Constant	k_E	0.69	0.54	0.44	0.34	V/1000 rpm
9	Torque Constant	k_M	6.6	5.2	4.2	3.3	mNm/A
10	Motor Regulation	R/k^2	8.6	8.5	8.5	8.5	10^3/Nms
11	Motor Regulation	$k/R^{½}$	10.8 (1.53)	10.8 (1.53)	10.8 (1.53)	10.8 (1.53)	mNm/$W^{½}$ (oz-in/$W^{½}$)
12	Internal Resistance - phase to phase	R_I	0.38	0.23	0.15	0.09	ohms
13	Line to Line Resistance at Connectors	R_L	0.42	0.25	0.18	0.11	ohms
14	Inductance Phase to Phase	L	0.057	0.035	0.022	0.013	mH
15	Mechanical Time Constant	τ_m	1.9	1.9	1.9	1.9	ms
16	Electrical Time Constant	τ_e	0.15	0.15	0.15	0.14	ms

General Data				
17	Maximum Motor Speed	n_{max}	73,000	rpm
18	Ambient Working Temperature Range	-	-30 to + 100 (-22 to + 212)	°C (°F)
19	Ambient Storage Temperature Range	-	-40 to + 100 (-40 to + 212)	°C (°F)
20	Ball Bearings Preload	-	5.5	N
21	Axial Static Force w/o Shaft Support (max)	-	34	N
22	Maximum Winding Temperature	-	125 (257)	°C (°F)
23	Thermal Resistance	R_{th}	2 / 9.7	°C/W
24	Thermal Time Constant	τ_w	1,000	s
25	Weight	-	100 (3.52)	g (oz)
26	Rotor Inertia	J	2.30	g-cm^2
27	Hall Sensor Electrical Phasing*	-	120	Electrical °

*Available without hall sensor

Wire	Description
Gray	Phase 1
Violet	Phase 2
Blue	Phase 3
Green	3.5 to 24V DC
Yellow	GND
Orange	Sensor 1
Red	Sensor 2
Brown	Sensor 3
Black	NTC 10 kohm
White	NTC 10 kohm
with hall effect sensor	

