5.05.800.064/0000

RAFIX 22 QR, blanking caps, opaque, slate gray, 29.8 mm x 29.8 mm, 22.3 mm



CE

description

Blanking plugs are used for installation in mounting holes in the front panel that are not required.

technical data

› general	
Bezel color	slate gray
Property of bezel / mushroom	opaque
Collar shape	round
Operating temperature, min.	-25 °C
Operating temperature, max.	70 °C
Storage temperature, min.	-40 °C
Storage temperature, max.	80 °C
illuminated	No
Packaging unit	10 pcs.
net weight	8.3 g
Degree of protection, front side, according to DIN EN 60529	IP65
MOQ order	10 pcs.
RoHS compliant	Yes
REACH compliant	Yes
› mounting diameters	
Outside dimension, length	29.8 mm
Outside dimension, width	29.8 mm
Outside dimension, height	16 mm
Mounting hole	22.3 mm
› mechanical data	
Fixing	Threaded ring
Threaded ring torque, max.	1.2 Nm

direct links

› RAFI eCatalog

The information in this data sheet only contains general descriptions and / or performance features, which may not apply precisely as described to the respective application, and which my change due to further product enhancements. The technical data, illustrations and other information about our products are the mere results of individual technical testing. These descriptions and other product features are only binding if they expressly agreed upon at the time of the conclusion of a binding contract. In all other cases, we reserve the right to make technical changes as well as changes of availability. Pictures and other graphic illustrations are approximations only. All product names may be trademarks or brand names of the RAFI Group or any other sub-supplier of RAFI. The use of such by any third parties for their own purposes may infringe the rights of the respective entity holding those rights.

RAFI GmbH & Co. KG

Ravensburger Str. 128-134
88276 Berg / Ravensburg
Germany
www.rafi-group.com,
info.headquarters@rafi-group.com

drawings

Dimensioned drawing

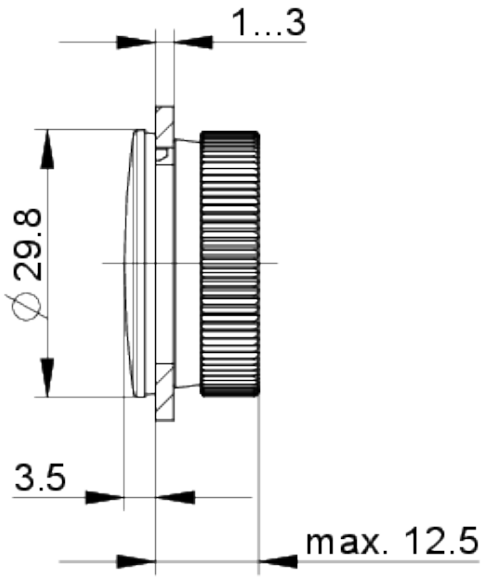

The information in this data sheet only contains general descriptions and / or performance features, which may not apply precisely as described to the respective application, and which my change due to further product enhancements. The technical data, illustrations and other information about our products are the mere results of individual technical testing. These descriptions and other product features are only binding if they expressly agreed upon at the time of the conclusion of a binding contract. In all other cases, we reserve the right to make technical changes as well as changes of availability. Pictures and other graphic illustrations are approximations only. All product names may be trademarks or brand names of the RAFI Group or any other sub-supplier of RAFI. The use of such by any third parties for their own purposes may infringe the rights of the respective entity holding those rights.

RAFI GmbH & Co. KG

Ravensburger Str. 128-134
88276 Berg / Ravensburg
Germany
www.rafi-group.com,
info.headquarters@rafi-group.com