Product data sheet
Characteristics

XCMD2115M12
limit switch XCMD - thermoplastic roller lever - 1C/O - snap - M12



Main

Range of product	OsiSense XC
Series name	Standard format
Product or component type	Limit switch
Device short name	XCMD
Sensor design	Miniature
Body type	Plug-in body
Head type	Rotary head
Material	Metal
Body material	Zamak
Head material	Zamak
Fixing mode	By the body
Movement of operating head	Rotary
Type of operator	Spring return roller lever thermoplastic
Type of approach	Lateral approach, 2 directions
Number of poles	1
Contacts type and composition	1 C/O
Contact operation	Snap action

Complementary

Tracks	24/31 mm
Switch actuation	By 30° cam
Electrical connection	Male connector M12, 4 pins
Contacts insulation form	Za
Positive opening	Without
Minimum force for tripping	0.1 N
Maximum actuation speed	1.5 m/s
[Ie] rated operational current	1.5 A at 240 V, AC-15 conforming to EN/IEC 60947-5-1 appendix A

Disclaimer: This documentation is not intended as a substitute for and is not to be used for determining suitability or reliability of these products for specific user applications

	0.1 A at 250 V, DC-13 conforming to EN/IEC 60947-5-1 appendix A
[Ithe] conventional enclosed thermal current	3 A
[Ui] rated insulation voltage	250 V (pollution degree 3) conforming to IEC 60947-5-1
Maximum resistance across terminals	25 mOhm conforming to IEC 60255-7 category 3
[Uimp] rated impulse withstand voltage	2.5 kV IEC 60664 2.5 kV IEC 60947-1
Short-circuit protection	4 A cartridge fuse, type gG
Electrical durability	5000000 cycles, DC-13, 24 V, 3 W, operating rate <60 cyc/mn, load factor: 0.5 conforming to IEC 60947-5-1 appendix C 5000000 cycles, DC-13, 48 V, 2 W, operating rate <60 cyc/mn, load factor: 0.5 conforming to IEC 60947-5-1 appendix C 5000000 cycles, DC-13, 120 V, 1 W, operating rate <60 cyc/mn, load factor: 0.5 conforming to IEC 60947-5-1 appendix C
Mechanical durability	10000000 cycles
Width	30 mm
Height	50 mm
Depth	16 mm
Net weight	0.125 kg

Environment

Shock resistance	25 gn for 18 ms conforming to IEC 60068-2-27
Vibration resistance	5 gn (f= 10…500 Hz) conforming to IEC 60068-2-6
IP degree of protection	IP66 conforming to IEC 60529 IP67 conforming to IEC 60529 IP68 conforming to IEC 60529
IK degree of protection	IK06 conforming to EN 62262
Electrical shock protection class	Class I conforming to IEC 61140 Class I conforming to NF C 20-030
Ambient air temperature for operation	-25…70 °C
Ambient air temperature for storage	-40…70 °C
Protective treatment	TC
Product certifications	CSA CCC UL
Standards	CSA C22.2 No 14 UL 508 EN/IEC 60204-1 EN/IEC 60947-5-1

Offer Sustainability

Sustainable offer status	Green Premium product
REACh Regulation	REACh Declaration
EU RoHS Directive	Pro-active compliance (Product out of EU RoHS legal scope) EU RoHS Declaration
Mercury free	Yes
RoHS exemption information	Yes
Environmental Disclosure	Product Environmental Profile
Circularity Profile	End of Life Information

Contractual warranty

Warranty	18 months

Dimensions

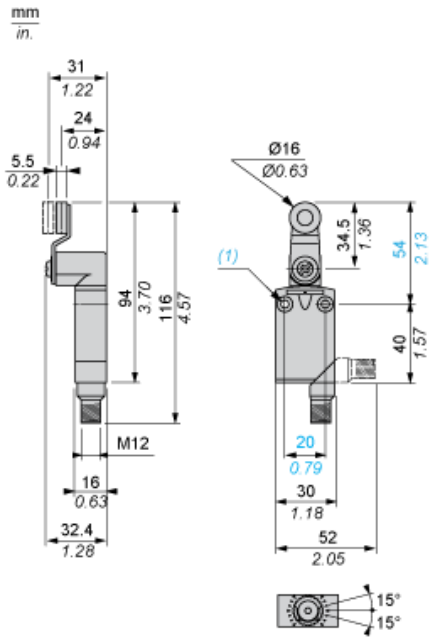

(1) 2 fixing holes Ø 4.2 mm, counterbored Ø 8 mm by 4 mm deep.

Mounting with Rotary Heads and Levers

Type of Cam

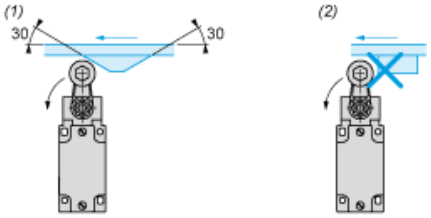

(1) Recommended
(2) To be avoided

Setting-up with Head ZCE01 and ZCE09

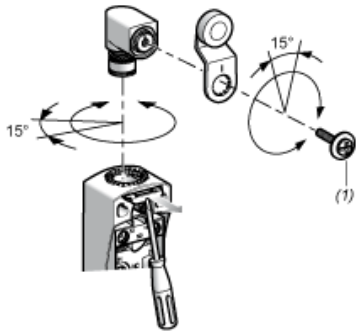

(1) Tightening torque (Min : 1) (Max : 1.5)

Wiring Diagram

Single-pole CO Snap Action + Integral M12 4-pin Connector

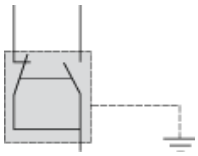

Wiring Diagram

4-pin, M12, 3A-250V

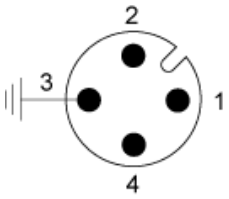

1 : Common
2 : NC
3 : Grounding
4 : NO

Characteristics of Actuation

Switch Actuation by 30° Cam

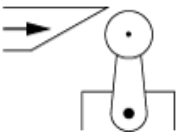

Functional Diagram

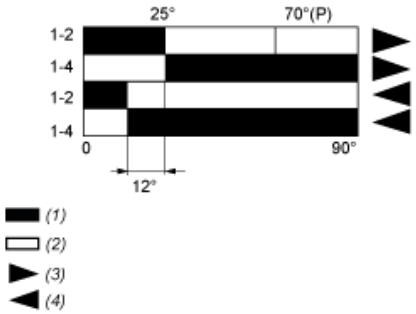

(P) Positive opening point
(1) Closed
(2) Open
(3) Tripping
(4) Resetting