OT5017

Retro-reflective sensor

OTP-FPKG/US-100-IPF

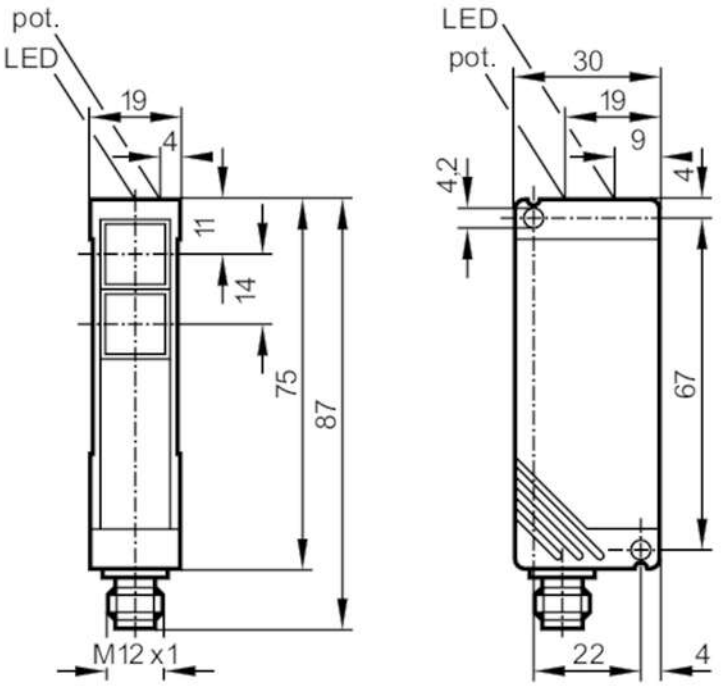

receiver in lower lens
transmitter in upper lens

Product characteristics		
Type of light		red light
Housing		rectangular
Application		
Special feature		polarisation filter
Function principle		Retro-reflective sensor
Electrical data		
Operating voltage	[V]	10...50 DC
Current consumption	[mA]	35; ((24 V))
Protection class		II
Reverse polarity protection		yes
Type of light		red light
Wave length	[nm]	660
Outputs		
Electrical design		PNP
Output function		light-on/dark-on mode; (programmable)
Max. voltage drop switching output DC	[V]	2.5
Permanent current rating of switching output DC	[mA]	250
Switching frequency DC	[Hz]	150
Short-circuit protection		yes

OT5017

Retro-reflective sensor

OTP-FPKG/US-100-IPF

Type of short-circuit protection		pulsed	
Overload protection		yes	
Detection zone			
Range referred to prismatic reflector	[m]	0.2...2; (Prismatic reflector Ø 80 E20005)	
Range adjustable		yes	
Max. light spot diameter	[mm]	280	
Light spot dimensions refer to		at maximum range	
Polarisation filter available		yes	
Operating conditions			
Ambient temperature	[°C]	-25...60	
Protection		IP 65	
Tests / approvals			
EMC		EN 60947-5-2	
		EN 55011	class B
MTTF	[years]	585	
Mechanical data			
Weight	[g]	162.5	
Housing		rectangular	
Dimensions	[mm]	75 x 19 x 30	
Materials		PBT	
Lens material		PMMA	
Lens alignment		side lens	
Displays / operating elements			
Display		switching status	1 x LED, yellow
		operation	1 x LED, green
Accessories			
Items supplied		Angle bracket: 1, E20461	
		screwdrivers	
Remarks			
Pack quantity		1 pcs.	
Electrical connection			

Connector: 1 x M12; coding: A

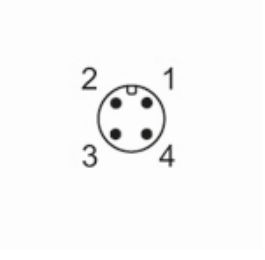

OT5017

Retro-reflective sensor

OTP-FPKG/US-100-IPF

Connection



Diagrams and graphs

excess gain graph

