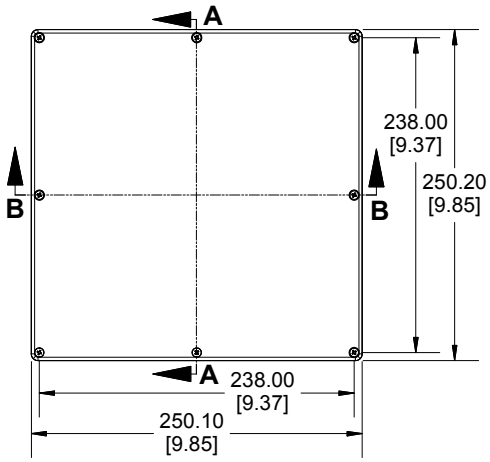

TOP VIEW

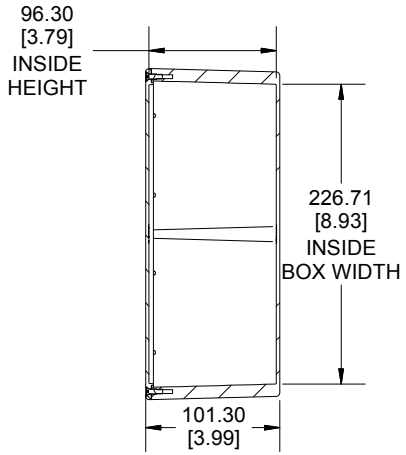

SECTION A-A
END VIEW

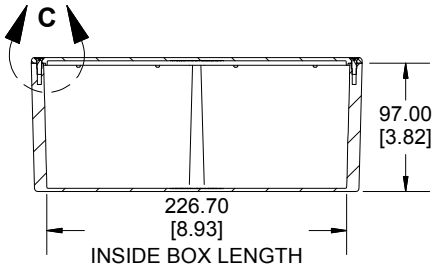

SECTION B-B
SIDE VIEW

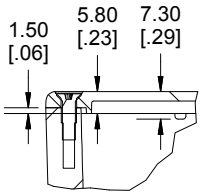

DETAIL C
SCALE 1 / 2

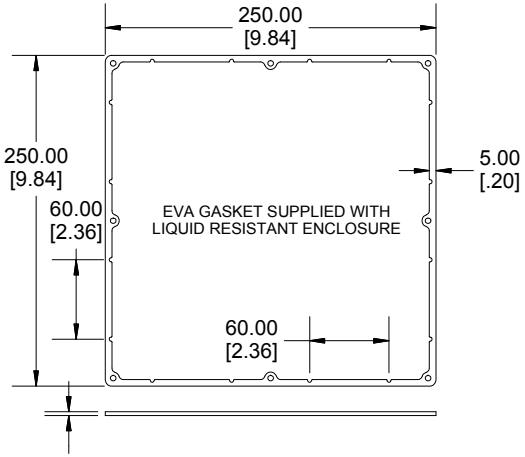

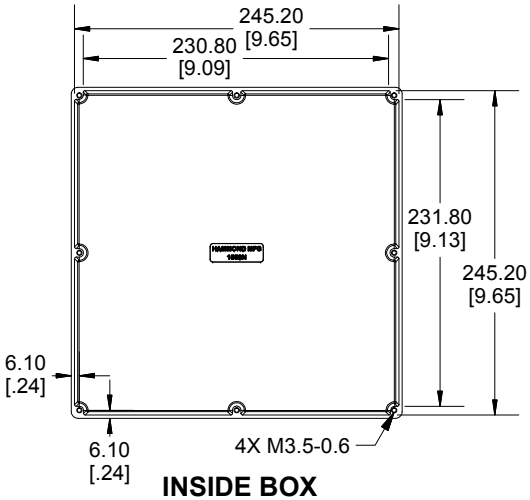

INSIDE BOX

DETAIL D
SCALE 3/4

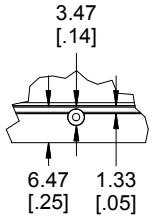

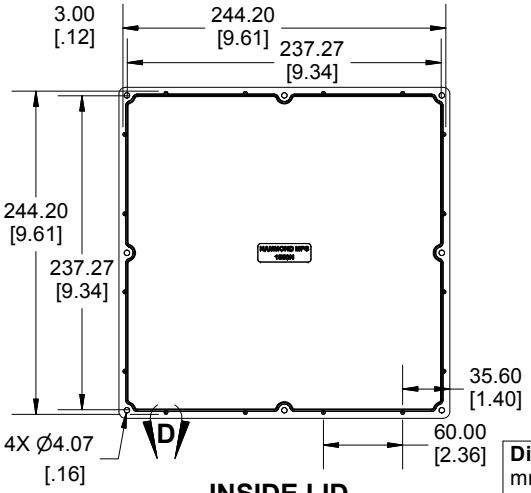

INSIDE LID

Dimensions:
mm
[inches]

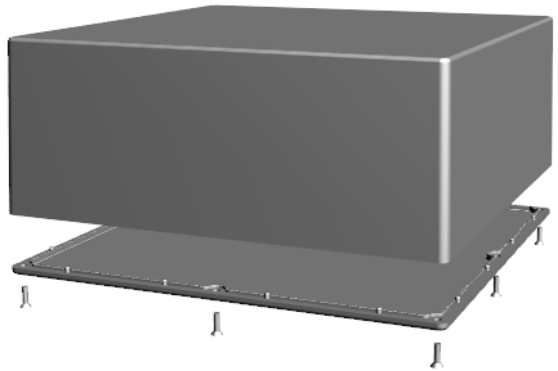

Enclosures can be Factory Modified (Milling, Drilling, Printing etc.)
Contact Factory mjm@hammondmfg.com for quotes
Solid models of this enclosure available in STEP or IGES.

NOTE
Purchased assembly includes box, lid and 4 cover screws. Box and lid are made from Diecast Aluminum Alloy. EVA Gasket supplied with liquid resistant enclosure.

PART NUMBERS	
1550N Enclosure	
Natural Finish Enclosure	1550N
Black Textured Enclosure	1550NBK
1550N Liquid Resistant Enclosure (EVA Gasket)	
Natural Finish Enclosure	1550WN
Black Textured Enclosure	1550WNBK
ACCESSORIES	
Recommended Torque: 75 ozf.in / 55 cN.m	
Standard Cover Screws	
Plated Cover Screws (Pkg 100) [M3.5-0.6 x 12mm]	1550MS100
Black Cover Screws (Pkg 100) [M3.5-0.6 x 12mm]	1550MS100BK
EVA Pre-formed Gasket Black	1550NEGASKET
Silicone Pre-formed Gasket Black	1550NSGASKET

HAMMOND MANUFACTURING®

1550N

www.hammondmfg.com