FIRST ANGLE PROJECTION

Note: Subject to technical modifications without prior notice.
Typographical and other errors do not justify any claim for damages.
All dimensions should be verified using the actual case.

Modifications	Iss
	1

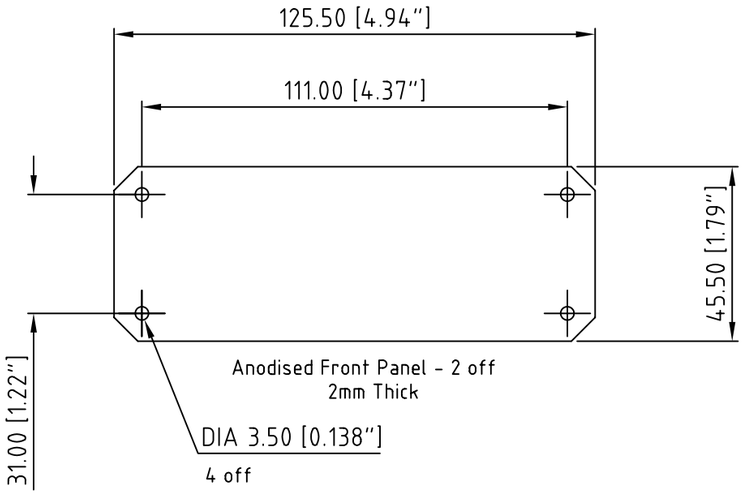

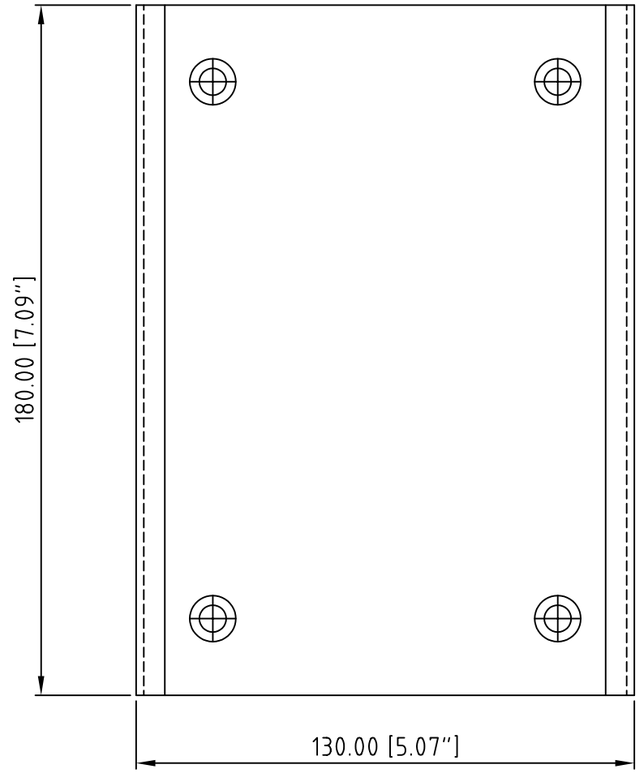

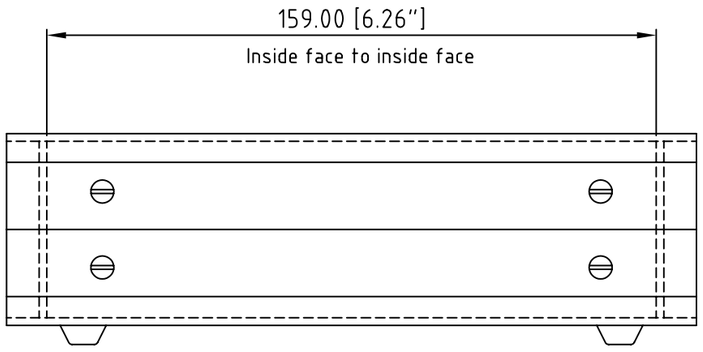

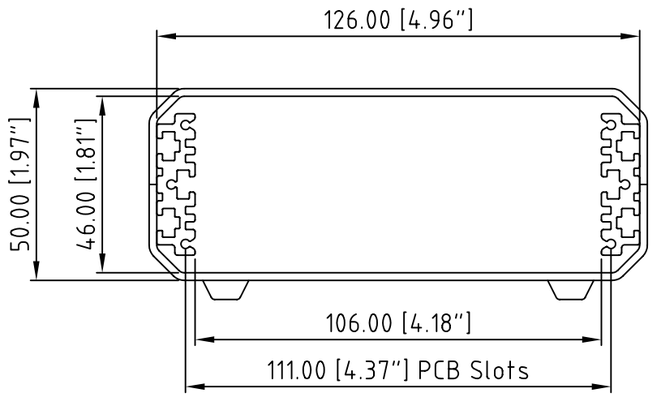

M5511110 - RAL 7035 Grey
M5511119 - RAL 9005 Black

Tolerances unless otherwise stated:

General tolerances ±0.20
Resultant tolerances between hole centers ±0.15
Tolerances on hole diameters ±0.05
Angles ± 0.5°
Surface finish 3.2

Required Finish:

Scale: 1:2

ALL DIMENSIONS IN MILLIMETRES (Inches in brackets)

DO NOT SCALE

Drawn by: Ian Cox

Checked By:

Drawing Number

Date drawn: November '05

Material Spec.

METcase™

www.metcase.com

METCASE ENCLOSURES
Unit 3, Mitchell Close
Segensworth East, Fareham,
Hampshire, PO15 5SE, UK.

Part Name: UNICASE SL1

Part Number: See table

Sheet 1 of 1

©OKW ENCLOSURES LTD; DATE AS SHOWN. THIS DRAWING CONTAINS PROPRIETARY INFORMATION OF OKW ENCLOSURES LTD AND IS TENDERED SUBJECT TO THE FOLLOWING CONDITIONS: THE INFORMATION BE RETAINED IN CONFIDENCE, NOT BE REPRODUCED OR COPIED, AND NOT BE USED OR INCORPORATED IN ANY PRODUCT, UNLESS PERMISSION IS OBTAINED IN WRITING FROM OKW ENCLOSURES LTD.

A4