E12728

Connection cable

VDOGS040--S0001H04DOAH040MSS

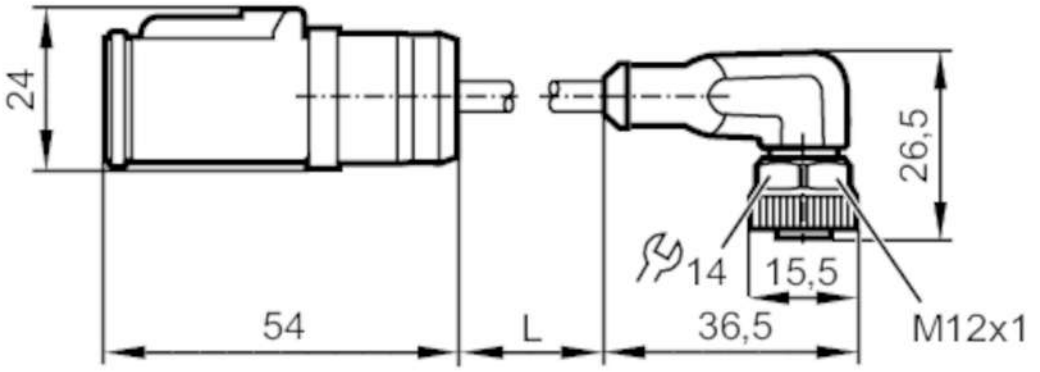

Application			
Special feature			Free from silicone; Halogen-free; Drag chain suitability
Free from silicone			yes
Electrical data			
Operating voltage	[V]		8...32 DC
Protection class			III
Max. current load total	[A]		4
Operating conditions			
Ambient temperature	[°C]		-40...80
Ambient temperature (moving)	[°C]		-20...80
Protection			IP 67; (mating connector plugged in)
Mechanical data			
Weight	[g]		93.2
Materials			PA; socket: TPU orange; Sealing: FKM
Material nut			brass, nickel-plated
Drag chain suitability			yes
Drag chain suitability		bending radius for flexible use	min. 10 x cable diameter
		travel speed	max. 3.3 m/s for a horizontal travel length of 5 m and max. acceleration of 5 m/s²
		bending cycles	> 5 Mio.
		torsional strain	± 180 °/m
Remarks			
Pack quantity			1 pcs.

E12728

Connection cable

VDOGS040--S0001H04DOAH040MSS

Electrical connection - socket

Connector: 1 x DEUTSCH connector, straight

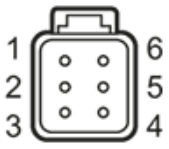

Electrical connection

Cable: 1 m, PUR, Halogen-free, black, Ø 5.4 mm; 4 x 0.50 mm² (28 x Ø 0.15 mm)

Connection

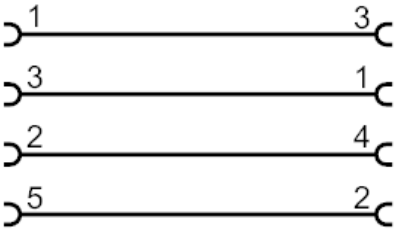

Electrical connection - socket

Connector: 1 x M12, angled; coding: A; Locking: brass, nickel-plated; Tightening torque: 0.6...1.5 Nm

