HLS - SINGLE ACTING LOW HEIGHT CYLINDERS



Capacities from 10 to 147 tonnes

Stroke lengths from 25 to 60mm

Working pressure 700 Bar

The HLS low height cylinder range is the most widely used Hi-Force cylinder design in the world today. All models have spring assisted return pistons and combine low closed height with optimum stroke lengths. Offering a compact, powerful force for a wide variety of applications in many industries including power generation, ship building & repair, construction, railways, mining, steel works, oil & gas and many others. The HLS range offers a compact, portable option in an inexpensive package.

- Spring assisted return
- Nitrocarburised piston rod
- Low friction bearing surfaces
- Anti-extrusion seals

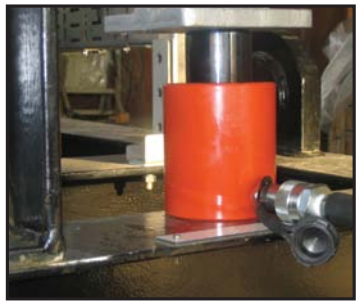



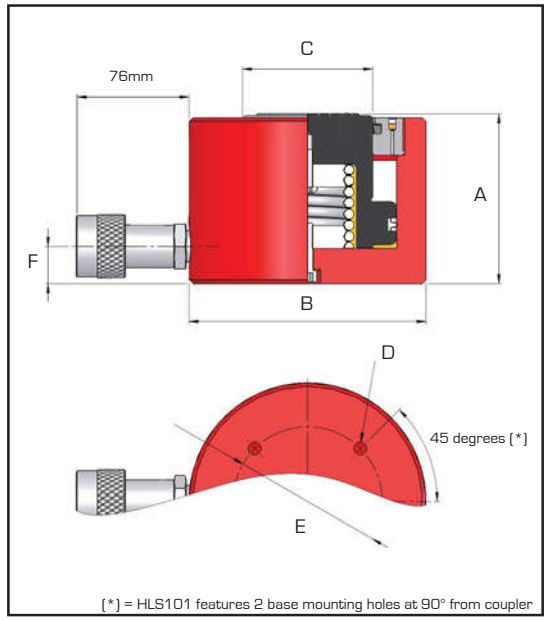

Model number	Capacity tonnes	Stroke mm	Oil cap. cm^3	Cyl. eff. area cm^2	Weight kg
HLS101	10	40	58	14.4	2.4
HLS201	20	44	126	28.6	4.8
HLS301	32	25	114	45.6	5.0
HLS302	32	60	274	45.6	7.0
HLS501	50	25	178	71.3	8.4
HLS502	50	60	428	71.3	10.4
HLS1001	109	25	384	153.4	19.8
HLS1002	109	60	921	153.4	24.0
HLS1501	147	25	516	206.2	37.0
HLS1502	147	50	1031	206.2	42.0

Dimensions in mm					
A	B	C	D	E	F
95	70	38	M8	40	19
102	90	51	M8	60	19
83	102	60	M8	80	19
119	102	60	M8	80	19
91	127	70	M8	80	20
126	127	70	M8	80	20
108	178	114	M12	140	30
143	178	114	M12	140	30
130	216	114	M12	165	41
155	216	114	M12	165	41